Recommended Practice for Machinery Installation and Installation Design

API RECOMMENDED PRACTICE 686
SECOND EDITION, DECEMBER 2009

REAFFIRMED, JULY 2024

ERRATA 1, JANUARY 2025

American Petroleum Institute

Special Notes

API publications necessarily address problems of a general nature. With respect to particular circumstances, local, state, and federal laws and regulations should be reviewed.

Neither API nor any of API's employees, subcontractors, consultants, committees, or other assignees make any warranty or representation, either express or implied, with respect to the accuracy, completeness, or usefulness of the information contained herein, or assume any liability or responsibility for any use, or the results of such use, of any information or process disclosed in this publication. Neither API nor any of API's employees, subcontractors, consultants, or other assignees represent that use of this publication would not infringe upon privately owned rights.

API publications may be used by anyone desiring to do so. Every effort has been made by the Institute to assure the accuracy and reliability of the data contained in them; however, the Institute makes no representation, warranty, or guarantee in connection with this publication and hereby expressly disclaims any liability or responsibility for loss or damage resulting from its use or for the violation of any authorities having jurisdiction with which this publication may conflict.

API publications are published to facilitate the broad availability of proven, sound engineering and operating practices. These publications are not intended to obviate the need for applying sound engineering judgment regarding when and where these publications should be utilized. The formulation and publication of API publications is not intended in any way to inhibit anyone from using any other practices.

Any manufacturer marking equipment or materials in conformance with the marking requirements of an API standard is solely responsible for complying with all the applicable requirements of that standard. API does not represent, warrant, or guarantee that such products do in fact conform to the applicable API standard.

All rights reserved. No part of this work may be reproduced, translated, stored in a retrieval system, or transmitted by any means, electronic, mechanical, photocopying, recording, or otherwise, without prior written permission from the publisher. Contact the Publisher, API Publishing Services, 200 Massachusetts Avenue, NW, Washington, DC 20001.

Copyright © 2009 American Petroleum Institute

Foreword

Nothing contained in any API publication is to be construed as granting any right, by implication or otherwise, for the manufacture, sale, or use of any method, apparatus, or product covered by letters patent. Neither should anything contained in the publication be construed as insuring anyone against liability for infringement of letters patent.

Shall: As used in a standard, “shall” denotes a minimum requirement in order to conform to the specification.

Should: As used in a standard, “should” denotes a recommendation or that which is advised but not required in order to conform to the specification.

This document was produced under API standardization procedures that ensure appropriate notification and participation in the developmental process and is designated as an API standard. Questions concerning the interpretation of the content of this publication or comments and questions concerning the procedures under which this publication was developed should be directed in writing to the Director of Standards, American Petroleum Institute, 200 Massachusetts Avenue, NW, Washington, DC 20001. Requests for permission to reproduce or translate all or any part of the material published herein should also be addressed to the director.

Generally, API standards are reviewed and revised, reaffirmed, or withdrawn at least every five years. A one-time extension of up to two years may be added to this review cycle. Status of the publication can be ascertained from the API Standards Department, telephone (202) 682-8000. A catalog of API publications and materials is published annually and updated quarterly by API, 200 Massachusetts Avenue, NW, Washington, DC 20001.

Suggested revisions are invited and should be submitted to the Standards Department, API, 200 Massachusetts Avenue, NW, Washington, DC 20001, standards@api.org.

Contents

Page

Chapter 1—Introduction 1-1

Chapter 2—Rigging and Lifting 2-1

Chapter 3—Jobsite Receiving and Protection 3-1

Chapter 4—Foundations 4-1

Chapter 5—Mounting Plate Grouting 5-1

Chapter 6—Piping 6-1

Chapter 7—Shaft Alignment 7-1

Chapter 8—Lubrication Systems 8-1

Chapter 9—Commisioning 9-1

Recommended Practice for Machinery Installation and Installation Design

Chapter 1—Introduction

Downstream Segment

API RECOMMENDED PRACTICE 686
SECOND EDITION, DECEMBER 2009

American Petroleum Institute

Contents

Page

1 Scope 1-1
1.1 Purpose. 1-1
1.2 Life Cycle Cost. 1-1
1.3 Contractual Requirements 1-1
1.4 Equipment Classification 1-1
1.5 Alternative Installation 1-1
1.6 Conflicting Requirements. 1-1

2 Definitions 1-1

Recommended Practice for Machinery Installation and Installation Design
Chapter 1—Introduction

1 Scope

1.1 Purpose

This recommended practice (RP) is intended to provide recommended procedures, practices, and checklists for the installation and precommissioning of new, existing, and reapplied machinery and to assist with the installation design of such machinery for petroleum, chemical, and gas industry services facilities. In general, this RP is intended to supplement vendor instructions and the instructions provided by the original equipment manufacturer (OEM) should be carefully followed with regard to equipment installation and checkout.

Most major topics of this RP are subdivided into sections of “Installation Design” and “Installation” with the intent being that each section can be removed and used as needed by the appropriate design or installation personnel.

1.2 Life Cycle Cost

It is the intent of this document to facilitate machinery installations that will provide the user with a reduced overall life-cycle cost of equipment ownership.

1.3 Contractual Requirements

API 686 is written such that it can be used as a contractual document between an owner company and an engineering and construction (E&C) contractor. The major benefit is that it provides a detailed scope of supply for machinery installation requirements, with acceptance criteria, and documentation requirements. There is then no ambiguity amongst multiple E&C bidders as to the requirements for project machinery installation (i.e. everyone is on an even playing field).

1.4 Equipment Classification

This RP is intended to address those installation and construction procedures associated with all machinery. Additional “special-purpose” requirements are covered at the end of each section as required.

1.5 Alternative Installation

The installation contractor or design contractor may offer alternative methods of equipment installation as mutually agreed upon by the user and equipment manufacturer.

1.6 Conflicting Requirements

Any conflicts between this RP and/or the manufacturers’ recommended procedures shall be referred to the user-designated machinery representative for resolution before proceeding.

2 Definitions

For the purposes of this document, the following definitions apply.

2.1
alignment
The process of reducing the misalignment of two adjacent shafts connected by a coupling so that the center of rotation for each shaft is as near collinear as practical during normal operation.

NOTE Most misalignment is combination misalignment. It can be resolved into a parallel offset at a given point along the fixed machine centerline and angular misalignment in both the horizontal and vertical planes. The offset is dependent on the location along the fixed machine centerline where it is measured, normally the center of the coupling spacer.

2.2
ambient offset
The practice of misaligning two shaft centerlines at ambient conditions to account for the estimated relative changes in shaft centerlines from static ambient conditions to steady state operating conditions.

2.3
angular misalignment
The angle between the shaft centerline of two adjacent shafts. This angle is normally reported in slope of millimeter of change per meter of linear distance (mils per in.) (1 mil = 0.001 in.).

2.4
baseplate
A fabricated (or cast) metal structure used to mount, support, and align, machinery and its auxiliary components. Baseplates may be directly grouted to concrete foundations (after proper leveling) or bolted to pre-grouted chockplates (see 2.9).

2.5
blowdown system
A closed system connected to a machine used to depressure and decontaminate the machine preparatory to maintenance activities; also known as a maintenance dropout system.

2.6
bolt bound
Where any hold-down bolt is not free in the bolt hole, so that the ability to move the moveable element in a machinery train horizontally or axially is constrained.

2.7
breakout spool
A short, flanged length of pipe immediately connected to the machinery piping flanges. Lengths vary with the size of the pipe but range from 15 cm (6 in.) to 1 m (3 ft). The purposes of this spool are to facilitate machinery installation, allow piping modification to reduce pipe strain, isolate the machinery, facilitate commissioning activities such as flushing or blowing lines, and allow removal of temporary inlet strainers; also known as a dropout spool.

2.8
cementatious grout
A type of grout material that is portland cement based.

2.9
chockplate
A solid steel (or alloy steel) plate with a machined top surface that is grouted to a concrete foundation to support and maintain alignment of a machinery structural steel baseplate.

2.10
combination misalignment
When the centerlines of two adjacent shafts are neither parallel nor intersect. This misalignment is normally described in both angular and offset terms.

2.11
condensing service
A gas stream that contains a vapor component that may condense to a liquid during startup, operation, or shutting-down of a compressor or blower. This may include pure vapors such as refrigerants as well as hydrocarbon gas

streams. When condensate is present in the gas stream, the term wet gas may be used. Wet gas may also be used as a synonym to condensing service.

2.12
critical service
Critical service is typically defined as those applications that are unspared /single-train installations whereby loss of operation would result in significant loss of production, loss of primary process containment, or threat to personnel safety.

2.13
dead-leg
A length of piping with no flow.

2.14
drop point
A vertical section of oil mist distribution piping that is usually smaller in diameter than the main oil mist header. This piping rises out of a tee in the main oil mist header, turns horizontally, and extends downward to the machinery being lubricated.

2.15
elastomeric coupling
A coupling that obtains its flexibility from the flexing of an elastomeric element.

2.16
engineering designer
The person or organization charged with the project responsibility of supplying installation drawings and procedures for installing machinery in a user facility after machinery has been delivered. In general, but not always, the engineering designer specifies machinery in the user facility.

2.17
epoxy grout
A type of grout material that consists of a resin base that is mixed with a curing agent (hardener) and usually an aggregate filler.

2.18
equipment installer
The person or organization charged with providing engineering services and labor required to install machinery in a user facility after machinery has been delivered. In general, but not always, the installer is the project construction contractor.

2.19
equipment train
Two or more rotating equipment machinery elements consisting of at least one driver and one driven element joined together by a coupling.

2.20
equipment user
The person or organization charged with operation of the rotating machinery. In general, but not always, the equipment user owns and maintains the rotating machinery after the project is complete.

2.21
final alignment
The aligning of two adjacent machinery shafts after the measurement of piping-imposed strains on the machinery are verified as being within the specified tolerances.

2.22
flexible-element coupling
A type of rotating machinery coupling that describes both disk and diaphragm couplings. A flexible-element coupling obtains its flexibility from the flexing of thin disks or diaphragm elements.

2.23
gear coupling
A type of rotating machinery coupling that obtains its flexibility by relative rocking and sliding motion between mating, profiled gear teeth.

2.24
general-purpose
Refers to an application that is usually spared or is in noncritical service.

2.25
general-purpose equipment trains
Those trains that have all general-purpose elements in the train. They are usually spared, relatively small in size (power), or in noncritical service. They are intended for applications where process conditions will not exceed 48 bar gauge (700 lb/in.^{2} gauge) pressure or 205 °C (400 °F) temperature (excluding steam turbines), or both, and where speed will not exceed 5000 revolutions per minute (rpm).

NOTE General-purpose equipment trains have all elements that are either manufacturer's standard or are covered by standards such as the following: ASME B73 pumps, small API 610 pumps, fans, API 611 steam turbines, API 672 air compressors, API 677 general-purpose gears, API 674 reciprocating pumps, API 676 rotary positive displacement pumps, API 680 reciprocating air compressors, and NEMA frame motors.

2.26
grout
An epoxy or cementatious material used to provide a uniform foundation support and load transfer link for the installation of rotating machinery. This material is typically placed between a piece of equipment's concrete foundation and its mounting plate (see 2.32).

2.27
grout pin
A metallic pin or dowel used to tie an epoxy grout pour to its concrete foundation to prevent delamination (or edge lifting) due to differential thermal expansion between the grout and the concrete.

2.28
head box
A device used to funnel grout into a baseplate grout fill-hole so as to provide a static head to aid in filling all baseplate cavities with grout.

2.29
isolation block valve
A valve used to isolate a process machine preparatory to maintenance. Also known as a block valve or isolation valve.

2.30
mechanical piping analysis
An analysis of the piping connected to a machine to determine the stresses and deflections of the piping resulting from temperature, pressure, and dynamic loadings such as pulsating flow (mixed phased flow). Determination of the type, location, and orientation of piping supports and piping guides results from this analysis.

2.31
minimum flow bypass
See **recycle line**.

2.32
mounting plate
A device used to attach equipment to concrete foundations; includes baseplates, soleplates, and chockplates. A mounting plate is a base-support mechanism for the attached machinery and all individual pieces of machinery are expected to be removable from the mounting plate as a single assembly.

2.33
non-slam check valve
A mechanically or hydraulically balanced check valve that allows closure of the valve in a controlled fashion. Wafer-style center-guided spring-loaded split-disc check valves or tilting-disc check valves are representative designs.

2.34
NPS
Nominal pipe size (in.) (followed by the specific size designation number without an inch symbol).

2.35
oil mist
A dispersion of oil droplets, of 1 to 3 micron size in an air stream.

2.36
oil mist application fittings
Long path orifices that cause the small oil droplet size in the header (“dry mist”) to be converted to larger size oil droplets (“wet mist”) to lubricate equipment bearings. Oil mist application fittings are also known as reclassifiers.

2.37
oil mist console
A system consisting of the oil mist generator, oil supply system, air filtering system, oil mist header outlet, and necessary controls and instrumentation. Air and oil enter the console to produce oil mist.

2.38
oil mist distributor block
A small rectangular block that has four or more holes drilled and tapped in opposite faces. Drop points terminate in distributor blocks. An oil mist distributor block may also be described as an oil mist manifold block.

2.39
oil mist generator
A device located inside the oil mist console that combines oil and air to make oil mist. Typical oil mist generators utilize a venturi to achieve mixing of the oil and the air.

2.40
oil mist header
A network of piping through which the oil mist is transported from the console where it is made to the machinery bearing housing where it is used.

2.41
oil mist lubrication
Lubrication systems that employ oil mist produced by atomization in a central unit and transported to a remote bearing housing, or casing, by compressed air. This system consists of the oil mist console, distribution piping headers and laterals, application fittings, and the lubricant supply tank and pump.

2.42
operating temperature (thermal) alignment
A procedure to determine the actual change in relative shaft positions within a machinery train from the ambient (not running) condition and the normal operating temperature (running) condition by taking measurements from startup to normal operating temperature while the machine(s) is (are) operating, or after the shafts have been stopped but the machines are still near operating temperature.

2.43
parallel offset misalignment
The distance between two adjacent and parallel shaft centerlines. This offset is normally described in a unit (millimeters or mils) at the flex element location.

2.44
peg test
A test performed on optical leveling equipment to ensure that the instrument is properly adjusted and its line of sight is coincident to true earth level.

2.45
preliminary alignment
The aligning of two adjacent machinery shafts to ensure that final alignment can be achieved without being bolt bound. This is accomplished before grouting and the measurement of piping strain on the machinery.

2.46
pulsation analysis
An analysis of the piping system connected to a machine to determine the acoustical and mechanical effects of pulsating flow. For small machines a pulsation analysis may consist of comparison to other installations and/or use of proprietary pulsation device design charts, formulas, or graphs. For large, complicated machines a pulsation analysis may consist of a detailed digital or analog modeling of the machine and the piping. Unless otherwise specified, API 688 should be used to provide guidance for the pulsation analysis.

2.47
pure oil mist lubrication (dry sump)
The application of oil mist to a machinery bearing housing to lubricate anti-friction bearings. The oil mist passes through the bearing elements, and oil droplets coalesce out of the air stream. All oil is drained from the machinery bearing housing and complete lubrication is provided by the mist alone.

2.48
purge oil mist lubrication (wet sump)
The application of oil mist to a machinery bearing housing or reservoir to provide a slight positive pressure. Machinery lubrication is by conventional ring oil or submerged bearing lubrication. This prevents contamination that could be caused by infiltration of corrosive agents or condensation of ambient moisture.

2.49
recycle line
A line from the discharge of a pump, blower, or compressor routed back to the suction system. A recycle line will usually include control elements such as meters or valves. The recycle line may connect directly into the suction line or may connect into suction vessels or liquid knock-out vessels and may include a cooler. Also known as bypass line, minimum flow bypass, or kickback line.

2.50
soleplate
A solid steel (or alloy steel) plate with a machined top surface that is grouted to a concrete foundation to support and maintain alignment of machinery.

2.51
special-purpose application
An application for which the equipment is designed for uninterrupted, continuous operation in critical service and for which there is usually no spare equipment.

2.52
special-purpose equipment trains
Equipment trains with driven equipment that is usually not spared is relatively large in size (power), or is in critical service. This category is not limited by operating conditions or speed.

NOTE Special-purpose equipment trains will be defined by the user. In general, any equipment train such as an API 612 turbine, API 618 reciprocating compressor, API 613 gear, API 617 centrifugal compressor, API 619 rotary screws, or equipment with a gas turbine in the train should be considered to be special-purpose.

2.53
static piping analysis
An analysis of the piping system connected to a machine to determine forces and moments on nozzle connections caused by various loading conditions such as pipe weight, liquid loads, and thermal expansion or contraction. These forces and moments are compared to vendor-allowable loads or national standards to ensure that nozzle loadings meet guidelines. This analysis includes specification of pipe anchors, guides, supports, and sometimes spring supports and expansion joints to control strain. Where large vertical piping displacements occur, machinery may sometimes be mounted on spring-supported baseplates to reduce nozzle loading.

2.54
suction knockout vessel
liquid dropout vessel
A vessel located in the suction line to a compressor or blower used to separate any entrained liquid from the gas stream. It may contain a demister mat and/or centrifugal separators to aid in this separation. Usually the compressor or blower takes suction from the top of the knockout vessel.

2.55
table top foundation
An elevated three-dimensional reinforced concrete structure that consists of large beams or a thick slab connecting the tops of the supporting columns. The mechanical equipment is supported by the large beams or the slab located at the top of the structure.

2.56
total acid number
TAN
The quality of base (expressed in terms of milligrams of potassium hydroxide) that is required to titrate the strong acid constituents present in 1 gm of an oil sample (ASTM Method P664 or D974).

2.57
total indicated runout
TIR
The runout of a diameter or face determined by measurement with a dial indicator (also known as total indicator reading). The indicator reading implies an out-of-squareness equal to the reading or an eccentricity equal to half the reading.

2.58
user-designated machinery representative
The person or organization designated by the ultimate owner of the equipment to speak on his/her behalf with regard to machinery installation decisions, inspection requirements, and so forth. This representative may be an employee of the owner, a third-party inspection company, or an engineering contractor as delegated by the owner.

2.59
vendor
supplier
The agency that, supplies the equipment.

NOTE The vendor may be the manufacturer of the equipment or the manufacturer's agent and normally is responsible for service support.

2.60
warm-up line
A line used to purge warm or hot fluid through a process machine. The intention is to heat up or maintain the temperature of a machine to a temperature greater than the surrounding ambient temperature.

Recommended Practice for Machinery Installation and Installation Design

Chapter 2—Rigging and Lifting

Downstream Segment

API RECOMMENDED PRACTICE 686
SECOND EDITION, DECEMBER 2009

American Petroleum Institute

Contents

Page

1 Scope 2-1

2 Preplanning 2-1

3 Lifting the Machinery. 2-2

Recommended Practice for Machinery Installation and Installation Design
Chapter 2—Rigging and Lifting

1 Scope

1.1 Chapter 2 provides general guidelines for rigging and lifting of machinery from shipping trucks, railcars, and so forth, onto the foundation or platform.

NOTE Chapter 2 is intended to be used for all machinery. Even small pumps can be damaged by improper lifts. The extent of the rigging and lifting plan can be reduced when specified by the user. The lifting plan for small machinery could be in the form of a site meeting at the start of construction, if agreed to by the user. However, if not specified otherwise, this section shall be used for all machinery.

1.2 This chapter is intended to supplement the rules and regulations that the rigging and lifting subcontractor must abide by, such as state or local government inspections and permits, OSHA 1926, Subparts H and N, and ASME/ANSI B30.

2 Preplanning

2.1 The installer shall be responsible for obtaining the following as a minimum:

a) shipping and net weights of each separate component of the machinery or machinery package; and

b) manufacturer drawings indicating the location of lifting lugs/points, the expected load at each point, and the center of gravity;

NOTE Lifting lugs are often provided on machinery to lift individual components and are not intended to be used to lift the entire machine (that is, lifting lugs on WP-II motor air housings cannot be used to lift the entire motor).

c) manufacturer's recommendations for the lift including the use of spreader bars, slings, and so forth.

2.2 The installer shall prepare a rigging and lifting plan of action that includes the following.

a) A rigging plan showing the lifting points and including the load capacities of spreader bars, slings, cables, shackles, hooks, rings, and so forth. Load capacities shall be based upon a minimum safety factor of 1.5. Plans shall also be made for lifting crated equipment.

NOTE When the safety factor of 1.5 results in the selection of a more expensive crane, the selection may be reduced upon an appropriate engineering review and agreement by both the installer and the user designated representative.

b) The selected lifting equipment and confirmation that the load and lift radius are within the capacity and range ratings of the manufacturer of the lifting equipment.

c) Layout sketches showing the setup location for the lifting equipment in relationship to the initial pick point of the load and its final installation point. The sketch should also show the proximity to important structures, pipe racks, and overhead electrical services. OSHA 1926.550 gives clearance requirements for electrical services.

d) Setup time for the lifting equipment and overall duration of the lift.

e) Coordinate with the plant traffic control personnel for any roadway blockages.

f) Check route to be taken when bringing machinery to final location. Check for overhead clearance, turn radius, road bed, high center railroad crossings, etc.

g) The installer shall check site plans for underground piping, sewers, electrical cables, or other utilities in the area of lift. Outrigger cribbing pads shall be used to eliminate any damage to roads and also to reduce the possibility of outriggers breaking through soft ground, reducing the capabilities of the crane.

NOTE Many lifts are made from unpaved areas. Point loads from crane tires and outriggers can damage underground utilities. Review potential problem areas with a civil engineer to determine if the ground cover is adequate.

2.3 The installer shall confirm that floor slabs on which the crane may sit have cured adequately. Confirm that machinery foundations have cured and grout preparations have been completed.

2.4 If the machinery will be set in a partially completed structure, or if structural members must be removed to lower the machinery into the structure, the lifting plan must be reviewed and approved by the structural engineer responsible for the design of the structure. Temporary shoring, bracing, or supports shall be reviewed and approved by the structural engineer.

2.5 The installer shall confirm that all equipment is up to date with respect to permits and inspections. Request that the rigging spreader bars, slings, cables, and so forth, are field inspected just prior to the lift being started. Refer to OSHA 1926, Subparts H and N, for inspection requirements.

2.6 The installer shall hold a prelift meeting with the user and manufacturer (if required) to ensure that the plan of action is agreed to and understood.

3 Lifting the Machinery

3.1 The installer shall verify that the cables and slings are bearing only on the intended lift points and are not transmitting any loads onto auxiliary piping, instruments, chain guards, and so forth.

3.2 Lift points for individual machinery pieces shall not be used for lifting machinery skids or packages. This can apply to lifting lugs that may be found on motors, gearboxes, casings, inspection covers, and so forth. When in doubt, consult the manufacturer. Equipment shafts shall not be used for lifting equipment.

3.3 For baseplate or skid-mounted machinery, only use lift points on the baseplate or skid. Do not use the machinery as a lift point unless approved by the manufacturer.

NOTE Care must be exercised in lifting skid-mounted equipment where part of the machinery or its auxiliaries have been removed for shipment, thus changing the center of gravity.

3.4 The installer shall keep other subcontractor and plant personnel from working under the lift and keep them a safe distance away until the machinery is secured in place on its foundation or structure.

3.5 Special-purpose machinery rotors are to be restrained to restrict axial travel prior to the lift. All restraining methods shall be externally obvious.

Recommended Practice for Machinery Installation and Installation Design

Chapter 3—Jobsite Receiving and Protection

Downstream Segment

API RECOMMENDED PRACTICE 686
SECOND EDITION, DECEMBER 2009

American Petroleum Institute

Contents

Page

1 Scope 3-1

2 Responsibility 3-1
2.1 Preplanning 3-1
2.2 Jobsite Receiving and Inspection 3-1
2.3 General Instructions—Jobsite Protection 3-2
2.4 Lubricants and Preservatives 3-5
2.5 Bolts 3-6
2.6 Spare Parts, Special Tools, and Miscellaneous Loose Items 3-6
2.7 Auxiliary Components for Rotating Equipment 3-6
2.8 Machinery—General Short Term Criteria 3-8
2.9 Reciprocating Compressors 3-8
2.10 Centrifugal Compressors 3-9
2.11 Fans and Blowers 3-10
2.12 Gearboxes 3-11
2.13 Pumps—General 3-11
2.14 Centrifugal Pumps 3-12
2.15 Vertically Suspended Pumps 3-12
2.16 Reciprocating Pumps 3-13
2.17 Steam Turbines 3-13
2.18 Rotary Screw Compressors 3-14
2.19 Motors 3-15
2.20 Instrumentation on Packaged Machinery 3-17

Annex A (informative) **Characteristics of Conventional Storage Preservatives** 3-19

Annex B (informative) **Machinery Receiving and Protection Checklist** 3-21

Annex C (informative) **Machinery Receiving and Inspection Checklist** 3-27

Annex D (informative) **Inert Gas Purge Maintenance Log** 3-28

Recommended Practice for Machinery Installation and Installation Design
Chapter 3—Jobsite Receiving and Protection

1 Scope

1.1 This recommended practice (RP) defines the minimum requirements for protecting project machinery and related components from deterioration while in field storage, after installation, and during the period prior to commissioning.

1.2 In all cases where the manufacturer's requirements or recommendations differ from the instructions provided in this document, the user-designated representative shall be consulted to determine which takes precedence.

1.3 An inspection and protective maintenance program shall be initiated and maintained by the user-designated representative for stored and installed equipment until it is turned over to the care, custody, and control of the user.

1.4 All design and installation requirements shall be ensured as being complete by completing the Machinery and Protection Checklist at the end of this chapter and submitting it to the user or his designated representative.

2 Responsibility

Overall responsibility for protecting project machinery from deterioration in the field, per this RP, rests with the construction manager and his/her designated representative until the machinery is turned over to the user.

2.1 Preplanning

2.1.1 Verify that all procurement schedules, shipping lists, manufacturer's storage recommendations, installation manuals, and drawings have been forwarded to the designated machinery representative.

2.1.2 Review weights, configuration, and method of shipping before arrival at the jobsite. Determine type of equipment required to unload the shipment, (that is, forklift, boom truck, crane, and so forth) and schedule accordingly.

NOTE See Chapter 2—Rigging and Lifting, for further details. Care must be taken to ensure that safe and appropriate rigging procedures are followed.

2.1.3 When specified, schedule the manufacturer's representative for receiving inspection. Schedule user's inspectors, where required, such as rotating equipment, instrument, and electrical engineers.

2.2 Jobsite Receiving and Inspection

Upon arrival of the machinery or portions thereof at the jobsite, follow the steps below.

a) Visually inspect components for physical damage or contamination by opening packages and crates. Hermetically sealed containers should not be opened, but visually inspected for damage and the hermetic seal maintained.

b) Verify that shipping protection has been applied and is still in effect.

c) Verify that shop inspection has been completed and that the vendor has supplied the purchase order documentation and packing lists.

d) Verify that loose components and separate packages match the packing lists.

e) Verify that special handling instructions are provided and carried out.

f) Verify proper identification of the components.

g) Perform visual inspection of components for compliance with project requirements.

h) Inspect carbon steel or other ferrous flange faces for damage and coat with Type A, Type B, or Type D preservative, unless prohibited by process application (see Note 1). Reinstall protective covers. Where car seals on inspection covers or flanges have been specified, inspect the car seals for integrity (see Note 2).

NOTE 1 Preservative types are described in Annex A. Final selection of the preservative depends on the type of storage (indoor, outdoor, sheltered), weather conditions, and atmospheric corrosion potential. Equipment datasheets and manufacturer's instructions shall be reviewed to determine if there are specific preservative requirements. Refer to the notes in Annex A for additional details.

NOTE 2 Use caution with soft-gasketed flanges. Soft gaskets may absorb water and corrode carbon steel flanges.

i) Verify that plugs and caps are in place, desiccants are unsaturated, and equipment is lubricated, as required. Nonmetallic (such as plastic) plugs and caps shall not be used.

j) Verify that inert-gas-purged (see Annex D) equipment still has the required pressure applied. Report failures to the manufacturer and request corrective action. This equipment shall remain sealed unless otherwise instructed by the designated machinery representative.

k) Inspect grout surfaces for proper factory blasting and coating.

l) Tapped openings in the stuffing boxes and gland plates shall be closed and sealed with pipe plugs. Plug material shall be of the same or better than seal gland plate metallurgy. As a minimum, the plugs shall be stainless steel.

m)When specified, impact-measuring devices shall be inspected to determine if the equipment has been exposed to any excessive shock loads. Where required, the manufacturing representative shall be present.

n) Record all inspections (refer to Annex B and Annex C).

o) Report any damage to the shipping company and vendor immediately. Ensure that any claim forms required by the shipper or vendor are completed.

2.3 General Instructions—Jobsite Protection

2.3.1 Manufacturer's or vendor's recommendations for storage and protective care shall be reviewed by a user-designated representative and shall be strictly followed when transmitted to the field. If the manufacturer's recommendations are not available, the information included in this RP shall be used as a minimum acceptable guide.

NOTE Failure to follow vendor's recommendation for storage and protective care may void the warranty.

2.3.1.1 Review the procurement documents to determine if the equipment had been prepared for a predetermined storage period. For example, if the equipment was procured per API standards, preparation for shipment would be "suitable for six months of outdoor storage from time of shipment, with no disassembly required before operation, except for inspection of bearings and seals. If storage for a longer period is contemplated, the purchaser will consult with the vendor regarding the recommended procedures to be followed."

NOTE It is recommended that where machines are to be partially or completely disassembled for storage preservation or inspection by the contractor or user, the vendor's service representative should be on site to ensure the accuracy of the work and the preservation of the warranty.

2.3.1.2 Protective storage requirements for specific items of equipment such as pumps, blowers, fans, compressors, and gearboxes are found in subsequent sections of this procedure.

2.3.2 Records documenting the following information are to be kept by field material control personnel using the forms referenced.

a) Conditions of equipment and materials upon arrival at the jobsite before and after unloading. Use the checklist in Annex B.

b) Maintenance and storage procedures followed, and dates maintenance was performed. See forms provided in Annex B and Annex C.

2.3.3 All equipment and material shall be stored free from direct ground contact and away from areas subject to ponding water. As a minimum, laydown areas shall be graveled.

2.3.4 For outdoor storage, even cross-cut timber with at least a 10 cm × 10 cm (4 in. × 4 in. nominal) cross section, laid flat and level, shall be used for laydown. Equipment weight shall be considered when selecting timber size. Warped timber or telephone poles are not acceptable. Timbers shall be placed perpendicular to major support structures and shall be full width of the skid or baseplate.

2.3.5 Indoor storage should be used whenever possible.

NOTE Third-party storage facilities may prove to be the most economical method for equipment requiring clean, dry, and climate-controlled conditions. On an existing site, the user may be able to provide some storage facilities.

2.3.6 Temporary protective coverings shall allow free air circulation to prevent humidity condensation and collection of water.

2.3.7 The installer shall attempt to preserve and maintain the integrity of the delivery packaging whenever possible. Replace packaging material after inspection. Review the integrity of control boxes and panels with respect to weather protection. Store indoors if required.

2.3.8 All carbon and low alloy steel shall be protected from any contact with corrosive or wet atmospheres so as to prevent rust formation.

2.3.9 Painted surfaces should not require additional protection but shall be examined periodically for signs of rusting. Touch-up, using the manufacturer's recommended methods and materials, shall be performed within a practical and reasonable period of time.

2.3.10 All items with machined surfaces should be stored so that the machined surfaces can be examined periodically (monthly) for signs of rust.

2.3.11 Any special parts and tools for construction purposes that accompany vendor shipments shall be tagged, protected, and stored per the vendor's and/or user's recommendations. All tags must be stainless steel and stainless-steel wired to the special part or tool. Paper tags are not permitted.

2.3.12 Keep the storage area and equipment clean by providing physical protection and covering when work operations such as concrete chipping, sanding, painting, and rigging are performed in the area. Stainless steel shall be protected from weld splatter and grinding dust of low alloy steel.

2.3.13 Periodic rotation of equipment will be discussed in subsequent sections. In all cases, determine that all shipping blocks on rotating components have been removed and that there is adequate lubrication before rotation. Determine that any desiccant bags or protective plastics are clear of moving parts. To rotate the shaft, use a tool such as a strap wrench that will not mark machined surfaces.

2.3.14 Preservatives and/or storage lubricants can adversely affect the safety and operating life of equipment if they react with the process fluid or operating lubricant. Specific examples are:

a) grease or oil-based products in contact with components to be installed in oxygen or chlorine service,

b) preservatives contaminating interiors of fluorochlorohydrocarbon refrigeration compressors, and

c) hydrocarbon flush oil contaminating synthetic oil passages.

The installer shall ensure that all preservative and storage lubricants are suitable for the specific application.

2.3.15 Unless otherwise specified, special-purpose equipment shall be stored with a positive pressure, 2 mm to 3 mm Hg (1 in. to 2 in. w.c.), dry nitrogen purge (see Note 1 below). The equipment shall have a temporary gauge to determine purge pressure. Remove the temporary gauge before start-up. The equipment shall be inspected weekly to ensure that purge integrity is maintained. If a positive pressure cannot be maintained, purge at a rate of 2 SLPM to 3 SLPM (4 SCFH to 6 SCFH).

NOTE 1 Review all nitrogen purge installations with the user's safety personnel with respect to confined space procedures, warning signs, and asphyxiation hazards before putting the purge into service.

NOTE 2 External (temporary) soft packing, held by adjustable stainless steel bands (geared clamps), can be placed against, or touching the labyrinths (or equivalent seals) of equipment rotating shafts to significantly reduce the amount of dry nitrogen purge.

2.3.16 All equipment cavities, cooling passages, mechanical seals, positive displacement pump plunger cavities, and so forth, shall be drained of all water to prevent damage due to freezing temperature.

2.3.17 Unless stated differently in subsequent sections on specific equipment, the following shall apply.

a) Oil-lubricated bearing housings, seal housings, stuffing boxes, hydraulic equipment, and gear cases shall be fogged and approximately one-fourth filled with a manufacturer-approved oil. All openings shall then be closed and sealed tightly.

b) When specified by the user, every other month the condition of the preservative oil shall be checked by measuring the total acid number (TAN) of the oil. If the TAN is greater than 0.2 mg KOH/gm oil, the preservation oil shall be replaced with fresh oil. The date when checked and the TAN shall be recorded in the inspection records. Check with the oil supplier to determine if it needs to be heated for replacement.

c) All externally exposed, bare carbon steel or cast iron surfaces including shafts and couplings (except elastomeric components) shall be coated with Type A, Type B, or Type D preservative. All machined surfaces shall be coated with Type A, Type B, or Type D preservative. All exposed machined surfaces shall also be wrapped with waxed cloth (see Note below).

NOTE Moisture can be held under waxed cloth if not tightly sealed. Periodic inspections under the cloth may be warranted.

d) Verify that grease-lubricated bearings have been greased by the manufacturer with the specified grease. Some greases are not compatible when mixed.

2.3.18 When an oil mist preservation system is specified by the user (see Note), it shall be as follows.

NOTE Oil mist systems are typically specified on large projects where more than ten pieces of equipment will be stored longer than six months or when dust or dampness is excessive.

a) Oil mist shall be used to protect the bearings, bearing housings, seal areas and process ends of the equipment.

1) Oil mist lubrication connections on equipment purchased for permanent oil mist lubrication shall be used.

2) Equipment purchaser shall have specified to equipment vendor that oil mist preservation will be utilized on the equipment.

3) Cavities not normally mist lubricated during permanent operation will need to be fitted with supply and vent connections (typically NPS 1/4).

b) The oil mist system shall be designed and sized for preservation service.

1) As a minimum the mist generator shall be equipped with the following instrumentation: air pressure regulator, pressure relief valve, level gauge, and mist pressure gauge.

2) The mist header system shall be NPS 2 minimum galvanized schedule 40 pipe properly supported and sloped.

3) Mist flow to each application point can be less than that required for lubrication during normal operation.

4) Plastic tubing (temporary use only) can be used to connect from the mist header to the application point.

c) The oil used in the mist system shall be a good quality, paraffin-free turbine oil. A temperature sensitive, vapor emitting oil should not be used in the oil mist system. Equipment preservative oils shall be compatible with the system elastomers and the oil used in the oil mist system to eliminate the need to disassemble and remove the preservative oil.

d) All machinery shall be connected to the system immediately upon arrival on site.

e) Equipment is maintained in the storage yard by rotating shafts and periodically draining condensed oil from the housing.

NOTE Oil shall not be drained to ground.

f) For equipment that will be permanently oil mist lubricated, the movement of equipment from the storage yard to permanent locations shall be coordinated so that the maximum outage of mist preservation is minimized.

2.4 Lubricants and Preservatives

2.4.1 The table and notes in Annex A describe some of the physical characteristics, application methods, and life expectancies of preservative Type A, Type B, Type C, and Type D that are referred to in this practice. Final selection types shall be approved by the equipment manufacturer and user. Other methods of preservation not listed on the table include: vapor corrosion inhibitor (VCI), nitrogen purge, and desiccants.

2.4.2 Care shall be taken to ensure the compatibility of the preservative with elastomeric parts, seals, gaskets, and so forth.

2.4.3 All lubricant and preservative material safety datasheets (MSDSs) shall be available, and associated hazards reviewed with all personnel handling and using these materials.

2.4.4 The term desiccant shall mean silica gel or any other approved water absorbing material. All desiccants shall have prior approval from the manufacturer or the user-designated representative. Check desiccant monthly. Replacements shall be approved by the user.

2.4.5 Preservatives shall not be used on surfaces where prohibited by process application.

2.4.6 In succeeding sections, references are made to removing preservatives before the machinery is placed in service. This is always true for Type D preservative. However, with the proper selection of Type A, Type B, and Type C, removal can be eliminated. The preservative would need to be compatible with the permanent lubricating fluid, the process fluid, and materials of construction, that is, elastomers. The preservative shall also be inspected to be sure that it has not absorbed any abrasive dust or contaminents.

2.4.7 VCIs provide a self healing barrier between the metal surface and moisture. All VCI's shall have prior approval from the manufacturer or the user-designated representative. Note that some VCIs may contain nitrites which attack copper and bronze.

2.4.8 Nitrogen purging provides protection by removing the moisture laden oxygenated atmosphere. Care should be taken when working with nitrogen to prevent asphyxiation.

2.5 Bolts

2.5.1 All loose assembly bolts, nuts, and fasteners shall be packaged, identified, and stored in a sheltered area.

2.5.2 Type B or Type C preservative shall be applied to the threaded portion of all anchor bolts, washers, and nuts that are not galvanized or plated.

2.6 Spare Parts, Special Tools, and Miscellaneous Loose Items

2.6.1 Items purchased as spare parts shall be tagged and handed over to the user-designated machinery representative upon receipt and completion of jobsite receiving inspection per 2.2.

2.6.2 Storage and protective maintenance of miscellaneous loose items shall be as directed by the manufacturer.

2.6.3 Extra drawings and manuals shipped with the equipment shall be saved and handed over to the user.

NOTE Formal distribution of these types of documents should have occurred before shipment per 2.1.1.

2.6.4 Special tools shall be kept by the installer until work has been completed, then turned over to the user-designated machinery representative.

2.7 Auxiliary Components for Rotating Equipment

The following applies to auxiliary piping that is shipped loose for field assembly.

2.7.1 Pipe Components

Carbon steel pipe components that will require long-term storage outdoors during the construction period shall be coated externally and internally with thinned Type B or a Type C preservative, unless prohibited by process application.

2.7.2 Coating and Sealing

2.7.2.1 Stainless steel pipe components that will require long-term storage outdoors in a salt water atmosphere during the construction period shall be coated externally and internally with thinned Type B or a Type C preservative, unless prohibited by process.

2.7.2.2 Contamination of dry gas seals may occur if Type B or Type C preservatives are used in gas seal supply piping. A VCI that can be removed prior to operation, may be an acceptable alternative.

2.7.3 Flanges

2.7.3.1 Flanges received bolted face-to-face need not be separated for inspection; however, the face-to-face crevice shall be coated with Type A, Type B, or Type D preservative prior to outdoor storage.

2.7.3.2 After inspection of loose flanges, flange gasket surfaces shall be coated with Type A, Type B, or Type D preservative prior to outdoor storage. Flanges for prefabricated piping and lube oil systems shall be gasketed and

covered with metal covers 3/16 in. thick for flanges 10 in. NPS and larger and 1/8 in. thick for flanges less than 10 in. NPS.

NOTE Temporary gaskets can usually be made from service sheet-gasket material.

2.7.3.3 Care shall be taken to protect gasket surfaces of loose flanges from damage during handling and storage.

2.7.3.4 Flanges to be stored outdoors for periods exceeding six months or in corrosive atmospheres (saltwater air, industrial, and so forth) shall be coated externally and internally with thinned Type B preservative.

2.7.3.5 Preservatives shall be removed from all surfaces with a suitable solvent prior to installation of the components.

2.7.4 Valves

2.7.4.1 Whenever possible, valves shall be stored indoors or under cover.

2.7.4.2 All machined surfaces such as valve stems (including threads), packing glands, and bonnet bolts shall receive a heavy coat of appropriate grease or equivalent for atmospheric corrosion protection.

2.7.4.3 Valve flange gasket surfaces shall be coated with Type A, Type B, or Type D preservative prior to reinstalling protective covers after internal inspection.

2.7.4.4 Protective covers shall be made of a weatherproof material and of such construction to provide a weather-tight seal. Plastic plugs and flange covers are not permitted.

2.7.4.5 All ball valve internals shall be coated prior to reinstalling protective covers after internal inspection.

2.7.4.6 All ball valves shall be protected and stored in the open position.

2.7.4.7 Multiple turn, metal-seated valves shall be stored in the closed position to minimize the length of stem exposed. Multiple turn, soft-seated valves shall be stored one turn from the closed position. Valves shall be stored with valve openings horizontal to prevent water accumulation.

2.7.4.8 All valves shall be stored on their sides above grade on a well-drained, hard surface.

2.7.4.9 Periodic (at least once per month) checks shall be made to ensure that protective procedures are effective. If deterioration is observed, the user shall be notified so that appropriate corrective action can be initiated.

2.7.4.10 Packing inhibitors are usually effective for only six months. Valves with packing that are stored for longer periods shall be checked and protected against stem corrosion if necessary.

2.7.4.11 Preservatives shall be removed with solvent from all surfaces prior to installation of valves.

2.7.4.12 All ring joint flanges shall be examined when received and the condition recorded. Spot checks for corrosion shall be made monthly while in storage.

2.7.5 Vendor-supplied Associated Components

Vendor-supplied associated components that will require long-term storage outdoors during the construction period (or stainless steel in a salt water environment) shall be stored and protected per the vendor's and/or user's recommendations.

NOTE Vendor-supplied associated equipment can include inlet air filters, pulsation suppressors, silencers, etc. that are specially designed for attachment to the main equipment, but are shipped separately.

2.8 Machinery—General Short Term Criteria

2.8.1 Clean and coat all flange gasket surfaces with Type A, Type B, or Type D preservative.

2.8.2 Install weatherproof protective covers of such construction to provide a watertight seal on all openings. Plastic plugs and flange covers are not permitted.

2.8.3 Consult the manufacturer to determine if additional intermediate rotor shaft supports are required. Provide the supports as necessary.

2.8.4 Spare rotating elements shall be stored per manufacturer's specific instructions.

NOTE Rotating elements should be stored in a controlled environment room or nitrogen purged containers. Vertical storage and/or a shipping container may be required.

2.8.5 Preservatives for oxygen, ethylene and refrigeration compressors must be approved by the equipment manufacturer.

2.9 Reciprocating Compressors

NOTE Also see 2.8 for general criteria.

2.9.1 Coat exposed rods, eccentrics, plungers, and machined surfaces with Type A, Type B, or Type D preservative. If the valves have been shipped loose, tag and store per manufacturer's recommendations.

2.9.2 Compressors with non-lubricated cylinders and packing shall not be contaminated with oil. Such machines, if not already shop protected, shall be sealed, purged of air, and kept pressurized with nitrogen at 2 mm to 3 mm Hg (1 in. to 2 in. w.c.).

Install a temporary pressure indicator to indicate nitrogen pressure. Remove the temporary gauge before compressor initial run-in.

2.9.3 Cylinders and crankcase shall be inspected when the compressor is received on site by removal of the inspection covers. If water or dirt has entered the equipment through damaged covers, the equipment shall be cleaned out and rust preventive treatment restored.

2.9.4 If the compressor requires field assembly, remove the protective coatings from cylinder walls, valves, rods, and so forth, and clean all parts (including crankcase) with solvent. Assemble using the manufacturer's recommended preservative freely on cylinder walls, valves, rods, bearings, and rubbing parts and fill crankcase as recommended by the manufacturer.

Do not install carbon rings or rod packing until the compressor is serviced for initial operation. Fill crankcase and lubricators as recommended by the manufacturer, with Type C preservative.

NOTE Where compressors require field assembly, the factory representative should be present to confirm inspection, preservation, and assembly procedures.

2.9.5 Rotor Turning of Reciprocating Compressors

2.9.5.1 Where applicable, open the drip feed lubricator and operate the force feed lubricators weekly. If the compressor has a manual priming main oil pump, operate it for at least one minute. Turn the crank shaft 2 $^{1}/_{4}$ revolutions. Shaft rotation must be accomplished with a strap wrench or other non-marring device. Verify that radial

bearings have adequate lubrication before turning shaft. Check for rust spots. Close the drip feed lubricators and refill the lubricators as necessary. Record protective activity in the inspection records.

2.9.5.2 The suggested turning of the rotor 2 1/4 revolutions (810°) weekly is intended to help prevent permanent rotor sag/bow. Rotors having many stages and large bearing-span/shaft-diameter ratios are more prone to rotor sag. If a rotor is stored vertically then rotor turning is not required.

2.9.5.3 If the rotor was initially blocked for shipment, unblocking before turning and re-blocking (per the manufacturers recommendation) after turning, will be required.

2.9.5.4 When applying the rotor turning requirement, if previously applied corrosion prevention is compromised, the corrosion inhibitors will need to be reapplied.

2.9.5.5 Prior to turning the rotor, heavy rotors may need to be lifted so as to reduce the load at the supporting journals.

2.9.5.6 Rotor turning may not be practical during shipment and should commence as soon as practical after delivery to intermediate and final destination sites.

NOTE If lubricated compressor cylinders are attached to the frame and the piston and rods are installed, only rotate the crankshaft if the compressor cylinder bore and piston rod packing lubricator can be operated prior to rotation. On NL compressors, if the compressor cylinders are attached to the frame and the pistons and rods are installed, only rotate the crankshaft if it has been confirmed that all desiccants have been removed and that a positive pressure dry nitrogen purge is being maintained on the cylinders.

2.9.5.7 Large compressor frames [in excess of approximately 4 m (12 ft) in length] that are not skid mounted and that are to be stored more than a few days prior to installation should be aligned following the manufacturer's recommendations to prevent permanent distortion of the compressor frame.

2.10 Centrifugal Compressors

NOTE Also see 2.8 for general criteria.

2.10.1 Open bearing housing and verify that vendor has applied protective coating to shaft journals and thrust bearing disc and that noncontacting vibration probe target areas are not disturbed. If deficient, reapply shaft lubricant and coat inside of housing with manufacturer's approved preservative.

2.10.2 Check all lubricant fill points, sight glass connections, and piping to seals to ensure that lubricants or protective fluids do not leak from any joints.

2.10.3 Ensure that a nitrogen purge, or vapor phase inhibitors and desiccant have been applied per the manufacturer's requirements.

2.10.4 The compressor shaft must be turned 2 1/4 revolutions once per week and accomplished with a strap wrench or other non-marring device.

2.10.5 Rotor Turning of Centrifugal Compressors

2.10.5.1 Mark shaft and rotate 2 1/4 revolutions weekly. Record protective activity in the inspection records. Shaft rotation must be accomplished with a strap wrench or other non-marring device. Verify that radial bearings have adequate lubrication before turning shaft.

2.10.5.2 The suggested turning of the rotor 2 1/4 revolutions (810°) weekly is intended to help prevent permanent rotor sag/bow. Rotors having many stages and large bearing-span/shaft-diameter ratios are more prone to rotor sag. If a rotor is stored vertically then rotor turning is not required.

2.10.5.3 If the rotor was initially blocked for shipment, unblocking before turning and re-blocking (per the manufacturers recommendation) after turning, will be required.

2.10.5.4 When applying the rotor turning requirement, if previously applied corrosion prevention is compromised, the corrosion inhibitors will need to be reapplied.

2.10.5.5 Prior to turning the rotor, heavy rotors may need to be lifted so as to reduce the load at the supporting journals.

2.10.5.6 Rotor turning may not be practical during shipment and should commence as soon as practical after delivery to intermediate and final destination sites.

2.10.5.7 Open and inspect bearing housing every two months.

2.10.5.8 Type A, Type B, and Type D preservative shall be removed with solvent from all surfaces prior to final installation of compressor.

2.10.5.9 All compressors, if expected to be in the field in excess of six months, shall be purged with nitrogen. When nitrogen is not available, case openings shall be sealed. Vapor phase inhibitor and desiccant shall be used to protect internals from rusting. The equipment shall be tagged indicating the number and location of all vapor phase inhibitor and desiccant bags.

2.10.5.10 Manufacturers typically ship compressors with gas seals installed to prevent damage to them. No further attention should be required other than keeping them clean and dry. A continuous nitrogen purge is recommended to accomplish this requirement.

2.10.5.11 Equipment with magnetic thrust and journal bearings and the secondary (start-up/shutdown) thrust and journal bearings do not require lube oil.

2.11 Fans and Blowers

The following procedure shall be used for receiving and protecting fans and blowers.

NOTE Also see 2.8 for general criteria.

2.11.1 Coat exposed machined surfaces and shaft extension with Type A, Type B, or Type D preservative.

2.11.2 Fill bearing housing to bottom of shaft with the manufacturer's recommended oil.

2.11.3 Rotor Turning of Fans and Blowers

2.11.3.1 Mark shaft and rotate 2 $^{1}/_{4}$ revolutions weekly. Record protective activity in the inspection records. Shaft rotation must be accomplished with a strap wrench or other non-marring device. Verify that radial bearings have adequate lubrication before turning shaft.

2.11.3.2 The suggested turning of the rotor 2 $^{1}/_{4}$ revolutions (810°) weekly is intended to help prevent permanent rotor sag/bow. Rotors having many stages and large bearing-span/shaft-diameter ratios are more prone to rotor sag. If a rotor is stored vertically then rotor turning is not required.

2.11.3.3 If the rotor was initially blocked for shipment, unblocking before turning and re-blocking after turning (per the manufacturers recommendation) will be required.

2.11.3.4 When applying the rotor turning requirement, if previously applied corrosion prevention is compromised, the corrosion inhibitors will need to be reapplied.

2.11.3.5 Prior to turning the rotor, heavy rotors may need to be lifted so as to reduce the load at the supporting journals.

2.11.3.6 Rotor turning may not be practical during shipment and should commence as soon as practical after delivery to intermediate and final destination sites.

2.11.4 Preservatives shall be removed with solvent from all surfaces prior to installation of fans and blowers.

2.11.5 Install weatherproof protective covers of such construction to provide a watertight seal on all openings. Plastic plugs and flange covers are not permitted.

2.12 Gearboxes

The following procedure shall be used for receiving and protecting gearboxes at the jobsite.

NOTE Also see 2.8 for general criteria.

2.12.1 Determine if gearbox oil level is correct. Add the manufacturer's recommended oil if gear case contains less than the required amount. Check bearing housing oil level; fill as necessary.

2.12.2 Coat exposed machined surfaces and shaft extension with Type A, Type B, or Type D preservative. Type D preservative shall be removed with solvent from all surfaces prior to installation.

2.12.3 Rotor turning of gearboxes.

2.12.3.1 Mark low-speed shaft and rotate 2 $^{1}/_{4}$ revolutions weekly. Shaft rotation must be accomplished with a strap wrench or other non-marring device. Verify that radial bearings have adequate lubrication before turning shaft.

2.12.3.2 The suggested turning of the rotor 2 $^{1}/_{4}$ revolutions (810°) weekly is intended to help prevent permanent rotor sag/bow. Rotors having many stages and large bearing-span/shaft-diameter ratios are more prone to rotor sag. If a rotor is stored vertically then rotor turning is not required.

2.12.3.3 If the rotor was initially blocked for shipment, unblocking before turning and re-blocking (per the manufacturers recommendation) after turning, will be required.

2.12.3.4 When applying the rotor turning requirement, if previously applied corrosion prevention is compromised, the corrosion inhibitors will need to be reapplied.

2.12.3.5 Prior to turning the rotor, heavy rotors may need to be lifted so as to reduce the load at the supporting journals.

2.12.3.6 Rotor turning may not be practical during shipment and should commence as soon as practical after delivery to intermediate and final destination sites.

2.12.4 Purge gear case with nitrogen if required by the manufacturer's instructions or if deemed prudent by the user for the climatic conditions at the site. Purge per 2.3.15.

2.12.5 Record protective activity in the inspection records.

2.13 Pumps—General

The following procedure shall be used for receiving and protecting pumps during the storage and installation period at the jobsite.

NOTE Also see 2.8 for general criteria.

2.13.1 Coat coupling parts, except elastomeric parts and flexible stainless steel discs, with Type A, Type B, or Type D preservative.

2.13.2 Shipping covers shall be removed, flange gasket surfaces inspected, and internals checked for cleanliness. Coat flange surfaces with Type A, Type B, or Type D preservative.

2.13.3 Tag all loosely shipped items (such as couplings, oilers, and seal system components, if loose) with the pump identification number and store in a covered area.

2.14 Centrifugal Pumps

2.14.1 Install weatherproof protective covers of such construction to provide a watertight seal on all openings. Plastic plugs and flange covers are not permitted.

2.14.2 Fill bearing housings to the bottom of shaft with the manufacturer's recommended oil for pumps with oil lubricated bearings. Put oil mist on the bearing housings of pumps that are oil mist lubricated (if possible at this time or as soon as possible). An external note should be clearly visible that the oil housings are full of oil. Fill all barrier fluid piping and components with the manufacturer's recommended fluid.

2.14.3 For cast iron, carbon steel, and low alloy pumps, fill the pump casing with Type C preservative and rotate to coat the internals.

2.14.4 Rotor Turning of Centrifugal Pumps

2.14.4.1 Mark shaft and rotate 2 $^{1}/_{4}$ revolutions weekly in the correct direction of rotation. Record protective activity in the inspection records. Shaft rotation must be accomplished with a strap wrench or other non-marring device. Verify that the radial bearings have adequate lubrication before rotating the shaft

2.14.4.2 The suggested turning of the rotor 2 $^{1}/_{4}$ revolutions (810°) weekly is intended to help prevent permanent rotor sag/bow. Rotors having many stages and large bearing-span/shaft-diameter ratios are more prone to rotor sag. If a rotor is stored vertically then rotor turning is not required.

2.14.4.3 If the rotor was initially blocked for shipment, unblocking before turning and re-blocking (per the manufacturers recommendation) after turning, will be required.

2.14.4.4 When applying the rotor turning requirement, if previously applied corrosion prevention is compromised, the corrosion inhibitor will need to be reapplied.

2.14.4.5 Prior to turning the rotor, heavy rotors may need to be lifted so as to reduce the load at the supporting journals.

2.14.4.6 Rotor turning may not be practical during shipment and should commence as soon as practical after delivery to intermediate and final destination sites.

2.14.5 Type D preservative shall be removed with solvent from all surfaces with solvent prior to installation of pump.

2.14.6 Fill the piping loop for the barrier fluid of a dual seal pump with a process compatible fluid if it contains any carbon steel components.

2.15 Vertically Suspended Pumps

2.15.1 Apply Type C preservative to shaft journals at sleeve bearings and to thrust bearing disc.

2.15.2 Fill bearing housings to the bottom of shaft with vendor-recommended oil.

2.15.3 Coat the bowl assembly with Type A, Type B, or Type D preservative and close both ends.

2.15.4 Coat barrel flange, discharge head flanges, stuffing box, and all other machined surfaces with Type A, Type B, or Type D preservative.

2.15.5 Install weatherproof protective covers of such construction to provide a watertight seal on all openings. Plastic plugs and flange covers are not permitted.

2.15.6 Type D preservative shall be removed with solvent from all surfaces prior to installation of pump.

2.16 Reciprocating Pumps

2.16.1 Remove pistons and rods, if recommended by the manufacturer; coat with Type A, Type B, or Type D preservative; tag each part with the equipment number; and store in covered area.

2.16.2 Remove rod packing, if recommended by the vendor; tag; and store in covered area.

2.16.3 Remove suction and discharge valves; dip in Type A, Type B, or Type D preservative; wrap in waxed cloth; tag; and store in covered area.

2.16.4 Fill crankcase with Type C preservative to the recommended level.

2.16.5 Coat cylinder wall and distance piece wall with Type C preservative.

2.16.6 Type D preservative shall be removed with solvent from all surfaces prior to installation of pump.

2.17 Steam Turbines

The following procedure shall be used for receiving and protecting turbines during the installation and storage period at the jobsite.

NOTE Also see 2.8 for general criteria.

2.17.1 Coat stuffing box and shaft in packing area with Type B or Type C preservative and replace on turbine.

2.17.2 Clean and coat all flange gasket surfaces with Type A, Type B, or Type D preservative.

2.17.3 Shipping covers shall be removed, flange gasket surfaces inspected, and internals checked for cleanliness. Plastic plugs and flange covers are not permitted.

2.17.4 Install weatherproof protective covers of such construction to provide a watertight seal on all openings.

2.17.5 Identify and tag all loosely shipped items and store in a covered area.

2.17.6 General-purpose Turbines

2.17.6.1 If carbon shaft packing rings were not removed at the factory, remove and store indoors. Apply a manufacturer approved rust preventive to the packing ring cavity after the rings are removed. Tag the turbine from which the rings have been removed. The carbon rings shall be reinstalled just prior to start-up. Removal and reinstallation shall be performed by qualified personnel.

2.17.6.2 Open bearing housings and coat shaft journals with Type C preservative.

2.17.6.3 Fill bearing housings to bottom of shaft with vendor recommended oil.

2.17.6.4 Coat shaft extension with Type A, Type B, or Type D preservative.

2.17.6.5 If a hydraulic governor is supplied, fill hydraulic governor per manufacturer's recommendation.

2.17.6.6 Rotate shaft 2 1/4 revolutions weekly. Record protective activity in the inspection records. Shaft rotation must be accomplished with a strap wrench or other non-marring device.

2.17.6.7 Type D preservative shall be removed with solvent from all surfaces prior to installation of turbine.

2.17.7 Special-purpose Turbines

2.17.7.1 Inspect and coat surfaces of valve rack, cam, and cam followers with Type A, Type B, or Type D preservative.

2.17.7.2 Open bearing housings and coat shaft journals, thrust bearing disc, and bearing housing internally with Type C preservative.

2.17.7.3 Coat shaft extension with Type A, Type B, or Type D preservative.

2.17.7.4 Special-purpose turbine casings/internals shall be protected with nitrogen purging. Purge per 2.3.15. Where this is not possible and approved by the user, spray turbine internals through openings with Type C preservative.

2.17.7.5 Rotor Turning of Steam Turbines

2.17.7.5.1 Mark shaft and rotate 2 1/4 revolutions weekly in the correct direction of rotation. Record protective activity in the inspection records. Shaft rotation must be accomplished with a strap wrench or other non-marring device. Verify that the radial bearings have adequate lubrication before rotating the shaft

2.17.7.5.2 The suggested turning of the rotor 2 1/4 revolutions (810°) weekly is intended to help prevent permanent rotor sag/bow. Rotors having many stages and large bearing-span/shaft-diameter ratios are more prone to rotor sag. If a rotor is stored vertically then rotor turning is not required.

2.17.7.5.3 If the rotor was initially blocked for shipment, unblocking before turning and re-blocking (per the manufacturers recommendation) after turning, will be required.

2.17.7.5.4 When applying the rotor turning requirement, if previously applied corrosion prevention is compromised, the corrosion inhibitors will need to be reapplied.

2.17.7.5.5 Prior to turning the rotor, heavy rotors may need to be lifted so as to reduce the load at the supporting journals.

2.17.7.5.6 Rotor turning may not be practical during shipment and should commence as soon as practical after delivery to intermediate and final destination sites.

2.17.7.5.7 Type D preservative shall be removed with solvent from all surfaces prior to installation of turbine.

2.18 Rotary Screw Compressors

NOTE Also see 2.8 for general criteria.

2.18.1 Coat exposed shafts, rods, and machined surfaces with Type A, Type B, or Type D preservative. If compressor's associated equipment, such as inlet filters, pulsation suppressors, silencers, have been shipped loose, tag and store per manufacturer's recommendations.

2.18.2 NL "dry screw" compressors with TFE or carbon rotor tip seals must not be contaminated with oil. Such machines, if not already shop protected, shall be sealed, purged of air, and kept pressurized with anhydrous nitrogen at 2 mm to 3 mm Hg (1 in. to 2 in. w.c.).

Install a temporary pressure indicator to indicate nitrogen pressure. Remove the temporary gauge before compressor initial run-in.

2.18.3 Compressor and associated compressor equipment shall be inspected when the compressor is received on site by removal of the inspection covers. If water or dirt has entered the equipment through damaged covers, the equipment shall be cleaned out and rust preventive treatment restored.

2.18.4 If the compressor and associated equipment requires field assembly, remove the protective coatings from shafts, flanges, rods, and so forth, and clean all parts (including oil sump) with solvent. Assemble using the manufacturer's recommended preservative freely on shafts, flanges, rods, bearings, and rubbing parts as recommended by the manufacturer.

Fill oil reservoir, oil piping, and pre-lubricator systems as recommended by the manufacturer, with Type C preservative.

NOTE Where compressors require field assembly, consideration should be given to bringing in the factory representative to confirm inspection, preservation, and assembly procedures.

2.18.5 Where applicable, operate the pre-lubricator pump weekly. If the compressor has a manual priming main oil pump, operate it for at least one minute. Turn the compressor shaft 2 1/4 revolutions. Shaft rotation must be accomplished with a strap wrench or other non-marring device. Check for rust spots. Refill the lubricators as necessary. Record protective activity in the inspection records.

2.18.6 On all rotary screw compressors, remove any rotor anti-rotation device or blocks prior to rotation.

2.18.7 If oil flooded compressors are being lubricated, only rotate the driveshaft if the compressor rotor bore lubrication can be operated prior to rotation.

2.18.8 On NL compressors, only rotate the driveshaft if it has been confirmed that all desiccants have been removed and that a positive pressure dry nitrogen purge is being maintained on the compressor.

2.18.9 Large compressor frames [in excess of approximately 4 m (12 ft) in length] that are not skid mounted and that are to be stored more than a few days prior to installation should be aligned following the manufacturer's recommendations to prevent permanent distortion of the compressor frame.

2.19 Motors

The following procedure shall be used for receiving and protecting electric motors during the installation period at the jobsite. Specific storage instructions are normally provided by all motor manufacturers. Failure to follow these instructions may void the warranty. The procedures that follow must be adhered to, provided they do not invalidate the manufacturer's warranty.

NOTE Also see 2.8 for general criteria.

2.19.1 Receiving Inspection of Motors

After receipt at site but prior to any motor being stored or installed, the following shall be performed.

a) An insulation resistance-to-ground test shall be made and recorded. This log will show the dates of the test and the insulation resistance value.

b) Oil levels shall be inspected. An inspection shall be made for any evidence of oil leakage.

c) Shafts shall be rotated and checked for freedom of movement.

2.19.2 Storage

2.19.2.1 Fill bearing housing with recommended oil if not factory lubricated or the level is low.

2.19.2.2 Coat shaft with Type A, Type B, or Type D preservative.

2.19.2.3 Wrap shaft seal areas with waxed cloth.

2.19.2.4 Apply Type A, Type B, or Type D preservative to machined areas of baseplate and motor case feet.

2.19.2.5 Store motors indoors when possible. A motor is suitable for outdoor storage if the enclosure Type is TEFC or explosion proof. Motors without space heaters shall not be stored outdoors without user's approval unless provisions are made by the installer to supply an adequate source of heat to the motor to protect it from moisture. If unable to store indoors, motors shall be stored in their operating position on a well-drained hard surface.

2.19.2.6 Vertical motors with ball bearings may be stored horizontally if they are oriented such that the drains are located at the low points to prevent any accumulation of water. Recommended storage position for vertical motors with sleeve type bearings is in the vertical position.

2.19.2.7 When a space heater is provided by the manufacturer, it shall be connected, energized, and operated continuously until the motor becomes operational. Proper warning signs must be installed to prevent injury or electrical shock to personnel.

2.19.2.8 Preservatives shall be removed with solvent from all surfaces prior to installation of motor, using caution to not have solvent contact the windings.

2.19.3 Rotor Turning of Motors

2.19.3.1 Rotate the shaft manually until the lubricant is evenly distributed to wearing surfaces. Rotate 2 $^{1}/_{4}$ revolutions weekly thereafter in the correct direction of rotation. Shaft rotation must be accomplished with a strap wrench or other non-marring device.

2.19.3.2 The suggested turning of the rotor 2 $^{1}/_{4}$ revolutions (810°) weekly is intended to help prevent permanent rotor sag/bow. Rotors having many stages and large bearing-span/shaft-diameter ratios are more prone to rotor sag. If a rotor is stored vertically then rotor turning is not required.

2.19.3.3 If the rotor was initially blocked for shipment, unblocking before turning and re-blocking (per the manufacturers recommendation) after turning, will be required.

2.19.3.4 When applying the rotor turning requirement, if previously applied corrosion prevention is compromised, the corrosion inhibitors will need to be reapplied.

2.19.3.5 Prior to turning the rotor, heavy rotors may need to be lifted so as to reduce the load at the supporting journals.

2.19.3.6 Rotor turning may not be practical during shipment and should commence as soon as practical after delivery to intermediate and final destination sites.

2.19.4 Testing

Insulation resistance of all motors shall be tested upon receipt, just prior to installation, and just prior to start-up and shall be recorded in the inspection records. The test voltage levels and the insulation resistance shall be per the manufacturer's instructions. If the megger readings do not meet the manufacturer's requirements, winding dryout may be required. Dry out the stator per the motor manufacturer's instructions. Other methods may be harmful to the windings.

2.20 Instrumentation on Packaged Machinery

2.20.1 All instruments shall be inspected by qualified personnel for compliance to purchase specifications, arrival at site clean, dry, and with proper protection at all openings, proper tagging, and inspected for shipping damage.

2.20.2 After inspection, instruments are to be replaced in their original factory boxes, properly tagged, and stored on shelves in a dry enclosed area.

2.20.3 For instruments or control panels that have been premounted on the machinery package that cannot be stored in a dry, enclosed area, the user and manufacturer shall be consulted.

NOTE Removal and indoor storage of premounted instruments and control panels may be required if such devices cannot be protected from rain, humidity, temperature, or dusty conditions. Explosion-proof enclosures are not necessarily weatherproof enclosures. Open conduit connections can allow entrance of moisture. This subject should have been addressed during the procurement or shop inspection stage, but is sometimes overlooked.

2.20.4 Electronic Instruments

2.20.4.1 Electronic instruments shall be stored in a dust-free room between 8 °C and 45 °C (45 °F through 110 °F).

2.20.4.2 If humidity is excessive, seal and store the instruments in plastic wrap, place in a box with desiccant outside the plastic wrapping, and store indoors. Take care that the desiccant does not contact any wiring, terminals, or electronic parts.

NOTE The avoidance of dust and excessive humidity may not be needed except for non weatherproof instruments.

2.20.4.3 The manufacturer's recommendations shall be reviewed to determine if climate-controlled storage facilities are required.

2.20.5 Pneumatic Instruments

Storage in a dry enclosed area is sufficient for pneumatic instruments.

2.20.6 Instrument Cases

2.20.6.1 Instrument cases with electronic parts, relays, and so forth, shall always be opened and checked by qualified personnel, unless shop inspections have been made and documented.

2.20.6.2 If the instrument case is in a weatherproof housing, reseal and store the instrument in a room between 8 °C and 45 °C (45 °F through 110 °F).

2.20.6.3 If in an explosion-proof housing, store in boxes with desiccant.

2.20.6.4 If covers need to remain open and unsealed, place the boxes in an indoor storage environment.

2.20.7 Local Control Panels

2.20.7.1 Open packaging enough to identify the control panel, reseal, and place in a dry enclosed area between 8 °C and 45 °C (45 °F through 110 °F).

2.20.7.2 When in a high-humidity area, put desiccant inside packaging before resealing.

2.20.8 Dial Thermometers, Pressure Gauges, Gauge Glasses

Protect against physical damage from construction activities, or remove, tag, and store in a dry enclosed area. Process connections shall be capped or plugged with metal caps/plugs until the instruments are reinstalled.

Annex A
(informative)

Characteristics of Conventional Storage Preservatives

Storage Condition and/or Severity	Outdoor Storage, General Exposure to Elements	Indoor Storage Under Severe Conditions or Outdoor Storage (Partial Shelter) Under Moderate Conditions, or Outdoor Storage with Exposure to Elements for Short Term Only	Indoor Storage Under Moderate Conditions	Outdoor Storage with Exposure to Elements Under the Most Severe Conditions
	Type A	Type B	Type C	Type D
Product and typical characteristics	Firm coating, resistant to abrasion	Soft coating (self-healing)	Thin oily film	Asphaltic film, needs removal before part is used
Density				
kg/m3 at 15.6 °C	868.5	923.7	876.9	922.5
lb/gal 60 °F	7.25	7.71	7.32	7.70
Viscosity				
cSt at 40 °C	—	—	14	149
cSt at l00 °C	24.8	33.1	3.3	—
SSU at 100 °F	—	—	79	800
SSU at 210 °F	123	162	37.4	—
Flash Point				
°C	279	260	166	38
°F	535	500	330	100
Melting or pour point				
°C	73	66	–4	—
°F	164	151	+25	—
Unworked penetration				
At 25 °C (77 °F)	75	245	—	—
Film thickness, mil	1.6	1.6	0.9	3.0
Approximate coverage				
m^2/liter	26	6	44	11
ft^2/gal	1000	1000	1800	450
Nonvolatiles, %	99	99	—	55
Methods of application/ temperature, °C	dip/85 brush swab/60–71	dip/77 swab/18-27	roller coat, brush, mist	spray, dip, or brush/ ambient
Maximum time until inspection and possible reapplication under condition				
Mild	Extended	Extended	6 to 12 Months	Extended
Moderate	1 to 3 Years	1 to 3 Years	1 to 6 Months	1 to 3 Years
Severe	6 to 12 Months	6 to 12 Months	Not recommended	6 to 12 Months

NOTE Extracted from proceedings of the Fourteenth Turbomachinery Symposium, Texas A&M University, Table I, Page 36, “Storage Preservation of Machinery” by Heinz P. Bloch.

NOTE 1 This tabulation represents an overview of interacting factors that allows the specifying engineer to select the most appropriate preservative for a given situation. Indoor and outdoor storage protection is addressed, but lubricants or preservatives used for oil mist systems are not covered.

NOTE 2 The severity of indoor storage is a function of such factors as dampness, poor air circulation, widely fluctuating temperatures, or presence of corrosive fumes. If conditions are moderately severe, product “C” will provide an adequate oily film and some abrasion resistance. It does not contain water-displacing or fingerprint-suppressing agents.

NOTE 3 Product “B” has a greaselike consistency and leaves a thick film that will provide protection in the most severe indoor environments. If stored parts are sheltered from direct exposure to sun, rain, and snow, effective outdoor rust protection can be achieved with this product. Application of product “B” is preferably made by dipping at a temperature of 71 °C to 77 °C (160 °F to 170 °F). For parts too large to dip, application can be made by brush. This product forms a soft, thick, waxy coating on application, with the surface coating gradually drying to form a protective film or crust while the underlying material remains soft and plastic. This is an important characteristic because it affords a self-healing effect. When a minor break occurs, the softer material will slowly flow together and reseal the damaged film.

NOTE 4 The degree of protection obtained in exposed outdoor environments will depend to some extent on the thickness and durability of the barrier film provided by the rust preventive material. For relatively short-term storage, product “B” will give effective protection. For longer periods, product “A” is recommended. It provides the toughest coating for a product of this type, and is more resistant to film rupture than product “B.” For dip application, product “A” should be heated to 85 °C (185 °F).

NOTE 5 Product "D" is a solvent-cutback asphaltic material. This product provides the best protection for long-term outdoor storage, but must be removed before the part is put into service. The preferred application method is by spray, although dipping and brush applications are also suitable. Product "D" dries to a thick, hard, durable, black film but may be removed with a good quality mineral spirits solvent.

NOTE 6 Although products “A” through “C” do not require removal before the part is placed in service, care should be taken to be sure that the coating has not absorbed abrasive dust.

NOTE 7 Many of the desirable attributes of premium preservatives are listed below:

— dry to a mildly tacky film that should not collect appreciable amounts of airborne particulates;

— provide freedom from oxidation in indoor and outdoor storage for extended periods of time;

— due to their polar nature, remove water from the pores of the metal, replacing the water with the rust preventive coating;

— in the form of films, have extremely low moisture transmission characteristics, even in contact with water;

— have the ability to neutralize acid, making a suitable rust preventive for acidic atmospheres and where fingerprints may create a corrosive action on metal surface;

— are self-healing, if in film form. If the film is accidentally ruptured, it should heal over the ruptured area;

— even as film, should be readily removed with solvent or a solvent-emulsion cleaner when desired;

— are safe to apply over partially painted or conventional elastomeric parts.

NOTE 8 Desiccants (moisture absorbing material), VCI products (provides self-healing barrier between the metal surface and moisture), and nitrogen purging (displaces oxygen) may be used and requires approval from the manufacturer or the user-designated representative.

NOTE 9 VCI products that contain nitrites will attack copper and bronze materials.

Annex B
(informative)

Machinery Receiving and Protection Checklist

Project No.:	Equip. Tag No.:	Report No.:
Prepared by:	Storage Location:	Date:
Equipment Description:		

Equipment No.: _____			
Section	**Requirements**	**Name**	**Date**
2.2	**Jobsite Receiving and Inspection**		
2.2 a)	Visual inspection for physical damage or contamination. Comments (before unloading): _____ _____ _____		
	Comments (after unloading): _____ _____ _____		
2.2 b)	Shipping protection intact?		
2.2 c)	Have off-site (shop) inspections been made?		
2.2 d)	Loose components/packages match packing lists?		
2.2 e)	Are special handling instructions required (and carried out)?		
2.2 f)	Components properly identified?		
2.2 g)	Do components comply with project requirements?		
2.2 h)	Flange faces undamaged and properly coated?		
2.2 i)	Plugs/caps in place, desiccants unsaturated, and equipment lubricated?		
2.2 j)	For inert gas purged equipment, is the required pressure still applied?		
2.2 k)	Grout surfaces clean and coated?		
2.2 l)	Tapped openings in stuffing boxes and gland plates sealed?		
2.2 m)	Impact measuring devices inspected (when specified)?		
2.2 n)	All inspections recorded on Annex B and Annex C?		
2.2 o)	Damage reports completed and issued to shipper/vendor?		
2.3	**General Instructions—Jobsite Protection**		
2.3.1	Are manufacturer's recommendations for storage and protection available and equipment protected accordingly? NOTE If so, the manufacturer's recommendations take precedence, but continue to follow this checklist for items not covered by the manufacturer.		
2.3.2	Records maintained in accordance with established procedures?		
2.3.3	Equipment/material free of ground contact? Laydown area graveled as a minimum!		
2.3.4	For outdoor storage, is equipment on timber?		

Equipment No.: _____			
Section	**Requirements**	**Name**	**Date**
2.3.5	Is indoor storage available at site? Is third-party storage available?		
2.3.6	Do temporary coverings allow free air circulation?		
2.3.7	Is integrity of original shipping packaging maintained?		
2.3.8	All carbon and low allow steels protected from corrosive environments?		
2.3.9	Painted surfaces should not require additional protection but shall be examined periodically for signs of rusting. Touch-up, using the manufacturer's recommended methods and materials, shall be performed within a practical and reasonable period of time.		
2.3.10	All items with machined surfaces shall be stored so that the machined surfaces can be examined periodically (monthly) for signs of rust.		
2.3.11	Any special parts and tools for construction purposes that accompany vendor shipments shall be tagged, protected, and stored per the vendor's and/or user's recommendations. All tags must be stainless steel and stainless-steel wired to the special part or tool. Paper tags are not permitted.		
2.3.12	Equipment protected from construction operations such as chipping, sanding, painting, rigging, welding, and so forth?		
2.3.13	For periodic rotation of equipment, are shipping blocks, desiccant bags, and protective plastic clear of moving parts? Is equipment properly lubricated for rotation?		
2.3.14	Have proper preservatives been selected?		
2.3.15	Nitrogen purge in place for special-purpose equipment or where specified? Use Annex C for logging of purge inspections		
2.3.16	All cavities, cooling passages, and so forth, drained of water to prevent freezing?		
2.3.17	Unless stated differently in subsequent sections on specific equipment, the following applies.		
2.3.17 a)	Oil lubed bearing housings, seal housings, stuffing boxes, hydraulic equipment, and gear cases fogged and 1/4 filled with approved oil (other acceptable methods can include the use of nitrogen purge and VCI emitters)?		
2.3.17 b)	When specified, measure and record TAN number.		
2.3.17 c)	Exposed carbon steel coated with Type A, Type B, or Type D preservative? Machined surfaces coated with Type A, Type B, or Type D and wrapped with waxed cloth?		
2.3.17 d)	Grease-lubricated bearings greased by the manufacturer?		
2.3.18	Oil mist system required and in accordance with requirements?		
2.4	**Lubricants and Preservatives**		
2.4.1	All desiccants have prior approval from the manufacturer or the user-designated representative and in accordance with Annex A?		
2.4.2	Are selected preservatives compatible with elastomeric parts, seals, gaskets, and so forth?		
2.4.3	MSDSs on file and hazards reviewed?		
2.4.4	Dessicants approved by the manufacturer or user-designated representative and checked monthly?		
2.4.5	Do preservatives need to be removed prior to process contact?		

Equipment No.: _____			
Section	**Requirements**	**Name**	**Date**
2.4.7	Do all VCIs have prior approval from the manufacturer or the user-designated representative. NOTE Some VCIs may contain nitrites which attack copper and bronze.		
2.4.8	Nitrogen asphyxiation hazards removed?		
2.5	**Bolts**		
2.5.1	Loose bolts, nuts, and fasteners identified and stored in sheltered area?		
2.5.2	Preservative applied to non-galvanized or plated items?		
2.6	**Spare Parts**		
2.6.1	Spare parts inventoried and issued to user upon receipt?		
2.6.2	Storage and protective maintenance of miscellaneous loose items as directed by the manufacturer?		
2.6.3	Extra drawings and manuals shipped with the equipment saved and handed over to the user?		
2.6.4	Special tools turned over to the user-designated machinery representative at the end of the job?		
2.7	**Auxiliary Piping for Rotating Equipment**		
2.7.1	Pipe components coated internally and externally prepared for storage?		
2.7.3	Flanges inspected and prepared for storage?		
2.7.4	Valves inspected and prepared for storage? Ball valves in open position? Soft-seated gate and globe valves in closed/off-seat position and stored horizontal?		
2.7.5	Vendor supplied associated components that will require long term storage outdoors during the construction period (or stainless steel in a salt water environment) stored and protected per the vendor's and/or user's recommendations?		
2.8	**Machinery—General Short Term Criteria**		
2.8.1	All flange gasket surfaces cleaned and properly preserved?		
2.8.2	Watertight covers on all openings?		
2.8.3	Are intermediate rotor shaft supports required?		
2.8.4	Is vertical storage of rotating elements required by the manufacturer?		
2.8.5	Preservatives and procedures for refrigeration, oxygen, and chlorine service approved by manufacturer?		
2.9	**Reciprocating Compressors**		
2.9.1	Exposed rods, eccentrics, plungers, and machined surfaces coated?		
2.9.2	Non-lubed compressors nitrogen purged, not contaminated with preservatives?		
2.9.3	Cover on openings in cylinders and crankcase undamaged? If damaged check for water or dirt inside.		
2.9.4	For field assembled compressors, have loose components been properly cleaned and preserved? Have carbon rings and rod packing been left out until just prior to initial operation?		
2.9.5	Crank shaft turned 2 1/4 revolutions once per week and accomplished with a strap wrench or other non-marring device.		
2.10	**Centrifugal Compressors**		
2.10.1	Is bearing housing properly lubricated and preserved?		
2.10.2	Have the lubricant fill points, site glass, and piping been checked for leaks?		

Equipment No.: _____			
Section	**Requirements**	**Name**	**Date**
2.10.3	Has a nitrogen purge, or vapor phase inhibitors and desiccant been applied?		
2.10.4	Compressor shaft turned 2 1/4 revolutions once per week and accomplished with a strap wrench or other non-marring device?		
2.11	**Fans and Blowers**		
2.11.1	Have all exposed low alloy surfaces and shafts been coated with preservative?		
2.11.2	Bearing housing oil level correct?		
2.11.3	Rotor shaft turned 2 1/4 revolutions once per week and accomplished with a strap wrench or other non-marring device?		
2.12	**Gearboxes**		
2.12.1	Is gearbox oil level correct and filled with manufacturer's recommended oil?		
2.12.2	Have machined surfaces and shafts been coated?		
2.12.3	Gearbox shaft turned 2 1/4 revolutions once per week and accomplished with a strap wrench or other non-marring device?		
2.12.4	Has a nitrogen purge been applied, when specified?		
2.13	**Pumps—General**		
2.13.1	Coupling parts, except elastomers and stainless steel discs, coated?		
2.13.2	Shipping covers removed and flange surfaces inspected and coated?		
2.13.3	Have loose components been tagged and properly stored?		
2.14	**Centrifugal Pumps**		
2.14.1	Have all openings been covered with a watertight seal?		
2.14.2 a)	Have bearing housings been filled with oil to bottom of shaft?		
2.14.2 b)	Oil mist installed where applicable?		
2.14.2 c)	All barrier piping filled with proper fluid?		
2.14.3	Have low alloy pump casings been filled with proper preservative and rotated to coat all internals?		
2.14.4	Pump shaft turned 2 1/4 revolutions once per week and accomplished with a strap wrench or other non-marring device?		
2.15	**Vertical Suspended Pumps**		
2.15.1	Has preservative been applied to shaft journals at sleeve bearing and thrust disc?		
2.15.2	Bearing brackets completely filled?		
2.15.4	Bowl assembly, barrel flange, discharge head flanges, stuffing box, and machined surfaces coated?		
2.15.5	Weatherproof covers installed on all openings?		
2.16	**Reciprocating Pumps**		
2.16.1	When recommended by manufacturer, have pistons and rods been removed, coated, tagged, and stored in covered area?		
2.16.2	Has rod packing been removed and tagged, when required?		
2.16.3	Have suction and discharge valves been removed, coated, and tagged, when required?		
2.16.4	Has crankcase been filled to the recommended level with preservative?		
2.16.5	Have cylinder and distance piece walls been coated?		
2.16.6	Exposed shaft coatings with Type D preservatives removed prior to pump installation?		

Equipment No.: _____			
Section	**Requirements**	**Name**	**Date**
2.17	**Steam Turbines**		
2.17.1	Have stuffing box, shaft in packing area, and flange gasket surfaces been coated?		
2.17.2	Are weatherproof covers on all openings?		
2.17.3	Have internals been inspected for cleanliness?		
2.17.4	Have loosely shipped components been tagged?		
2.17.6	**General-purpose Turbines**		
2.17.6.1	Have carbon rings been removed, tagged, and stored indoors, when required?		
2.17.6.2	Have shaft journals been lubricated?		
2.17.6.3	Have bearing housings been filled with proper lubricant?		
2.17.6.4	Have exposed shafts been coated?		
2.17.6.5	Has governor been filled with manufacturer's approved fluid?		
2.17.6.6	Turbine shaft turned 2 1/4 revolutions once per week and accomplished with a strap wrench or other non-marring device?		
2.17.6.7	Type D preservatives removed prior to installation of turbine?		
2.17.7	**Special-purpose Steam Turbines**		
2.17.7.1	Have valve racks, cam, and cam followers been inspected and coated?		
2.17.7.2	Have bearing housings, shaft journals, and thrust bearing discs been coated?		
2.17.7.3	Have exposed shafts been coated?		
2.17.7.4	Has the nitrogen purge been applied where possible or internals alternatively coated for preservation?		
2.18	**Rotary Screw Compressors**		
2.18.1	Exposed shafts and machine surfaces properly protected?		
2.18.2	“Dry” compressors maintained clean and dry with a nitrogen purge?		
2.18.3	Inspected upon shipment arrival and cleaned, preserved, and all openings covered and weather-tight?		
2.18.4	For field assembly units, clean and preserve as recommended by the manufacturer during assembly?		
2.18.5	Where applicable, pre-lube pump operated weekly? Shaft rotated 2 1/4 turns weekly with a strap wrench or other non-marring device?		
2.18.6	All anti-rotation devices removed before attempting to rotate?		
2.18.7	Ensure that rotor bores on oil flooded compressors are lubricated before rotating.		
2.18.8	Ensure that all desiccants have been removed and a nitrogen purge established on NL compressors before rotating.		
2.18.9	Large compressors aligned to prevent frame distortion?		
2.19	**Motors**		
2.19.1.a)	Has an insulation test been made and logged?		
2.19.1.b)	Have oil levels been checked and any leakage noted?		
2.19.1.c)	Shafts rotated and checked for freedom of movement?		
2.19.2.1	Bearing housing filled with recommended lubricant?		
2.19.2.2	Has shaft been coated with proper preservative?		
2.19.2.3	Have seal areas been covered with waxed cloth?		

Equipment No.: _____			
Section	**Requirements**	**Name**	**Date**
2.19.2.4	Have motor baseplate machined surfaces or feet been coated?		
2.19.2.5	Have non-weatherproof motors been stored indoors?		
2.19.2.6	Have vertical motors been stored vertically?		
2.19.2.7	Have space heaters been energized? Have warning signs been posted?		
2.19.2.8	Preservatives removed prior to installation?		
2.19.3	Shafts rotated 2 1/4 turns weekly with a strap wrench or other non-marring device?		
2.20	**Instrumentation on Packaged Machinery**		
2.20.1	Do instruments comply with specifications, and are they properly tagged?		
2.20.2	Are loose instruments stored in a dry enclosed area, in original factory packaging?		
2.20.3	Can premounted instruments be stored outdoors?		
2.20.4	**Electronic Instruments**		
2.20.4.1	Are electronic instruments stored in a dry dust-free room?		
2.20.4.2	Are instruments stored in a humidity controlled area?		
2.20.5	**Pneumatic Instruments**		
2.20.5	Are instrument cases and local control panels stored in a dry enclosed area?		
2.20.6	**Instrument Cases**		
2.20.6.1	Electronic component cases opened and inspected?		
2.20.6.2	Check sealing of weatherproof enclosures and properly stored.		
2.20.6.3	Explosion-proof housings stored indoors with desiccant?		
2.20.6.4	Covers that must remain open and unsealed stored indoors?		
2.20.7	**Local Control Panels**		
2.20.7.1	Packaging opened sufficiently to inspect components and then resealed for preservation.		
2.20.7.2	Desiccant bags placed in enclosures in high humidity areas?		
2.20.8	**Dial Thermometers, Pressure Gauges, Gauges**		
2.20.8	Are thermometers, pressure gauges, and gauge glasses protected from physical damage?		

Annex C
(informative)

Machinery Receiving and Inspection Checklist

Equipment No.: _____

Periodic Services Between Time Received and Start-up (See Note)							
Item	**Interval**	**Dates/Initials**					
Visual inspection that coverings and coatings are intact	Monthly						
Inspection of painted surfaces	Monthly						
Inspection of machined surfaces	Monthly						
Inspect desiccant	Monthly						
Motor insulation resistance test	Monthly						
Inspect bearing housing; replace/ refill as necessary	2 Months						
Check TAN of preservative oil, if specified	2 Months						
Oil check	2 Weeks						
Rotation of shafts	Weekly						
Compressors— lubrication	Weekly						

NOTE For nitrogen blanketing log, see Annex D.

Annex D
(informative)

Inert Gas Purge Maintenance Log

Inert Gas Purge Maintenance Log							
Project No:		Equipment Tag No:			Report No:		
Prepared by:		Location:			Date:		
Purge Medium Required:		Purge Pressure Required:			Interval (a):		
Date	Checked By	Connections Ok Yes/No		Gauge Pressure	Flow Rate (b)	Initial	Remarks

(a) Interval D = Daily, W = Weekly, M = Monthly

(b) Record flow rate in SLPM (SCFH) when a continuous flow purge is used in lieu of a constant pressure blanket.

Recommended Practice for Machinery Installation and Installation Design

Chapter 4—Foundations

Downstream Segment

API RECOMMENDED PRACTICE 686
SECOND EDITION, DECEMBER 2009

American Petroleum Institute

Contents

Page

1 Scope 4-1
2 Acronyms and Abbreviations 4-1
3 Definitions 4-1
4 General Design Requirements 4-2
5 Geotechnical Design 4-4
6 Rectangular Block Foundation Design 4-4
7 Vertically Suspended Pump Foundation Design 4-6
8 Elevated Frame Foundation Design 4-6
9 Effects of Equipment Design on Surrounding Area 4-6
10 Concrete Design 4-7
11 Anchor Bolt and Reinforcing Steel Design 4-7
12 Drawing Design Information 4-8
13 Machinery Foundation Installation 4-9
14 General Installation Requirements 4-9
15 Soil Condition Installation 4-9
16 Formwork Installation 4-9
17 Reinforcing Steel Installation 4-10
18 Anchor Bolts and Sleeve Installation 4-10
19 Field Verification Prior to Concrete Placement 4-10
20 Concrete Mixing and Placement Procedures 4-10
21 Concrete Quality Control 4-11

Annex A (normative) **Machinery Foundation Checklist** 4-12

Annex B (informative)**Typical Foundation and Anchor Bolt Details** 4-15

Figures
B.1 Typical Rectangular Block Foundation Detail 4-15
B.2 Typical Vertically Suspended Can Pump Foundation 4-16
B.3 Typical Anchor Bolt Detail—Option 1, Grout Pour Not to Edge of Foundation 4-17
B.4 Typical Anchor Bolt Detail—Option 2, Grout Pour to Edge of Foundation 4-18

Recommended Practice for Machinery Installation and Installation Design
Chapter 4—Foundations

1 Scope

1.1 Unless otherwise indicated, this recommended practice (RP) addresses the general considerations for the design and installation of soil-supported reinforced concrete foundations supporting general- and special-purpose machinery.

1.2 Any conflicts between this RP, the engineering drawings, the equipment manufacturer's specifications, other specifications referenced in this RP, and the contract documents shall be brought to the attention of the user for resolution.

1.3 All design and installation requirements shall be ensured as being complete by completing the Installation Checklist in Annex A and submitting it to the user or his designated representative.

2 Acronyms and Abbreviations

ACI American Concrete Institute

ANSI American National Standards Institute

ASCE American Society of Civil Engineers

ASTM American Society for Testing and Materials

PIP Process Industry Practices

OSHA Occupational Safety and Health Administration

3 Definitions

For the purposes of this document, the following definitions apply.

3.1
critical service
Critical service is typically defined as those applications that are unspared /single-train installations whereby loss of operation would result in significant loss of production, loss of primary process containment, or threat to personnel safety.

3.2
designated machinery representative
The person or organization designated by the ultimate user of the equipment to speak on the user's behalf with regard to machinery installation decisions, inspection requirements, and so forth. This representative may be an employee of the user, a third party inspection company, or an engineering contractor, delegated by the user.

3.3
engineering designer
The person or organization charged with the project responsibility of supplying installation drawings and procedures for installing machinery in a user facility after machinery has been delivered. In general, but not always, the engineering designer specifies machinery in the user facility.

3.4
equipment installer
The person or organization charged with providing engineering services and labor required to install machinery in a user facility after machinery has been delivered. In general, but not always, the installer is the project construction contractor.

3.5
equipment user
The organization charged with operation of the rotating equipment. In general, but not always, the equipment user owns and maintains the rotating equipment after the project is complete.

3.6
general-purpose equipment trains
Those trains that have all general-purpose elements in the train. They are usually spared, relatively small in size (power), or are in noncritical service. They are intended for applications where process conditions will not exceed 48 bar gauge (700 lb/in.^{2} gauge) pressure or 205 °C (400 °F) temperature (excluding steam turbines), or both, and where speed will not exceed 5000 revolutions per minute (rpm).

NOTE General-purpose equipment trains have all elements that are either manufacturer's standard or are covered by standards such as the following: ASME B73 pumps, small API 610 pumps, fans, API 611 steam turbines, API 672 air compressors, API 677 general-purpose gears, API 674 reciprocating pumps, API 676 rotary positive displacement pumps, API 680 reciprocating air compressors, and NEMA frame motors.

3.7
special-purpose equipment trains
Equipment trains with driven equipment that is usually not spared, is relatively large in size (power), or is in critical service. This category is not limited by operating conditions or speed.

NOTE Special-purpose equipment trains will be defined by the user. In general, any equipment train such as an API 612 turbine, API 618 reciprocating compressor, API 613 gear, API 617 centrifugal compressor, API 619 rotary compressors, or equipment with a gas turbine in the train should be considered to be special-purpose.

3.8
table top foundation
An elevated three-dimensional reinforced concrete structure that consists of large beams or a thick slab connecting the tops of the supporting columns. The mechanical equipment is supported by the large beams or the slab located at the top of the structure.

4 General Design Requirements

4.1 This section provides guidelines for the pre-installation design of soil-supported reinforced concrete foundations supporting machinery. The final detail design of the foundation shall be performed under the direction of a qualified engineer considering all possible forces, deflection limitations, vibration responses, geotechnical conditions, and mechanical and environmental requirements.

4.2 Unless otherwise specified, all machinery, including vertical in-line pumps, shall be supported by a reinforced concrete foundation. Machinery that requires an elevated installation may be supported on structural steel of adequate stiffness and strength.

NOTE Elevated machinery may be directly supported by structural steel provided adequate stiffness and strength is provided. The intent of 4.2 is to discourage the use of concrete foundations without reinforcing steel and stilt supported equipment.

4.3 The recommended minimum foundation dimensions, the sizes and locations of the anchor bolts, and the forces applied by the machinery must be obtained from the equipment vendors to aid in the design of the foundation.

4.4 The development of the foundation dimensions shall consider the layout of the equipment, the piping arrangement, maintenance and installation clearances, concrete cover required for anchor bolts, and the minimum outline dimensions recommended by the equipment vendor.

NOTE For block foundation the thickness is normally greater than one-fifth the least plan dimension and less than one-tenth the largest plan dimension.

4.5 The elevation of the top of the foundation shall be set to allow a minimum thickness of grout of 25 mm (1 in.).

NOTE The grout manufacturer should be consulted to determine the maximum and minimum thickness of grout for a particular installation. Factors such as flowability and heat generation should be taken into account when the grout thickness is determined. Reference Chapter 5 of this RP for additional requirements for machinery grouting.

4.6 The bottom of the foundation shall be placed at a sufficient depth below the ground to prevent damage to the machinery or piping by the effects of frost penetration.

NOTE The foundation can be designed to accommodate the effects of frost penetration or for application in permafrost. A geotechnical investigation that determines the frost susceptibility of soils is essential. Proper drainage is essential to ensure that the soils do not accumulate excess water.

4.7 The design engineer should also consider incorporating the individual foundations of several machines in the same vicinity into one common foundation mat. When multiple machines are placed on a single mat foundation, the dynamic and static analysis shall consider all possible loading arrangements and combinations of the machines to produce the most unfavorable effects on the supporting foundation, including partial foundation loading due to removal of individual units for maintenance.

NOTE Consideration should be given to incorporating the foundations of several individual machines in the same vicinity into one foundation. A large combined mat foundation may provide a more economical foundation than several closely spaced individual foundations. This may not be applicable to machinery with rolling element bearings that may sit idle while adjacent to operating machinery that may result in brinneling of the idle equipment bearings.

4.8 The structural design of all reinforced concrete shall be in accordance with ACI 318, *Building Code Requirements for Reinforced Concrete*.

4.9 The foundation design shall be capable of resisting all applied dynamic and static loads specified by the machinery manufacturer, loads from thermal movement, dead and live loads as applicable or as specified in the local building codes, wind or seismic forces, and any loads that may be associated with installation or maintenance of the equipment. Operating loads apply to any loads possible in the operating range.

4.10 For design, the loads specified in 4.9 shall be combined to produce the most unfavorable effect on the supporting foundation, but the effects of both wind and seismic activity need not be considered to act simultaneously.

NOTE ASCE 7, *Minimum Design Loads for Buildings and Other Structures*, may be used as a guide for determining design loads unless otherwise specified by an applicable local building code, user design criteria, or the manufacturer's specifications. Design load combinations may be as specified in ACI 318.

4.11 The foundation shall have adequate strength and rigidity to meet the deflection limitations specified by the machinery manufacturer when subjected to all design load combinations specified in 4.10. The foundation shall be free of resonant frequencies within a minimum of 20 % of the operating speed range of the equipment. If the analysis indicates that the foundation resonant frequency separation margins still cannot be met or that a noncritically damped response peak falls with the operating speed range and the purchaser and vendor have agreed that all practical design efforts have been exhausted, then acceptable amplitudes shall be mutually agreed upon by the purchaser and the vendor.

4.12 Machinery loads shall be supported directly by the foundation and not by access platforms.

NOTE Machinery mounted on the top of the columns and/or major cross beams of a properly designed elevated frame foundation is considered to be in accordance with this provision.

4.13 The driven machinery and the driver shall be supported from a common foundation.

NOTE The common foundation is to reduce the possibility of differential settlement between the two components.

4.14 Foundations for reciprocating compressors greater than 150 kilowatts (200 brake horsepower) and all table-top special-purpose equipment shall be dynamically analyzed. If the analysis predicts a resonance, then the mass and/or stiffness of the foundation shall be adjusted to avoid resonance.

NOTE Increasing mass tends to lower natural frequency of foundation and increasing stiffness/rigidty tends to increase natural frequency of foundation.

4.15 Reciprocating compressor trains in the same vicinity shall be arranged (when practical) with the crankshafts parallel to each other and not in line and the design must be performed by a qualified foundation engineer.

NOTE Same vicinity assumes that the trains are located close enough together that a common mat may be needed. By arranging them in parallel the foundation will get wider in the direction needed to resist rocking unbalance. Also, if trains are oriented in a line on a common mat, differential settlements causing shaft misalignment may be increased. This statement does not imply that a suitable in line arrangement cannot be designed, but by arranging them in parallel, some problems may be minimized.

4.16 Supports for the crankcase distance pieces, cylinder, and pulsation dampers shall be an integral part of the block (supported by a common foundation).

5 Geotechnical Design

5.1 Machinery foundations shall be proportioned for all loading conditions with respect to topsoil conditions. The foundation shall be designed to support the applied service loading without exceeding the allowable bearing capacity of the soil (refer to 5.3) or the allowable limits for settlement to prevent damage to piping system connections, internal machinery alignment, or other connecting auxiliary equipment.

5.2 In the absence of known soil parameters, a qualified geotechnical consultant (soil specialist) shall establish the soil properties necessary for foundation design.

NOTE In the absence of known soil design values, a geotechnical engineer may be employed to provide the field exploration and laboratory testing required to evaluate the soil properties supporting the foundation. The structural engineer must exercise good judgment as to when a geotechnical engineer is needed. A geotechnical engineer should always be used for soil foundation design for machine foundations over 150 kilowatts (200 horsepower).

5.3 The maximum soil pressure due to static and dynamic load combinations shall not exceed 75 % of the allowable soil bearing capacity. When wind or earthquake loading is included in the load conditions, the allowable capacity can be increased by one-third. Uplift of the foundation due to overturning moment from the equipment unbalanced forces shall be avoided (i.e. the soil bearing pressure shall be compressive across the width of the foundation).

5.4 The foundation shall be of adequate size to provide uniform bearing pressure and minimal differential settlement. To reduce the potential for differential static settlement, the center of the mass of a machine foundation should coincide with the centroid of the soil foundation or pile resistance. The horizontal eccentricity shall be limited to 5 % of the corresponding foundation dimension.

6 Rectangular Block Foundation Design

6.1 This section provides guidelines for machinery block foundation design. The final detail dimensions and reinforcing steel requirements are dependent on a structural (static and/or dynamic) analysis or other means to judge that the foundation will perform adequately.

NOTE In addition to a static structural analysis, a complete block foundation design may require a dynamic structural analysis including consideration of the soil interaction, unbalanced dynamic forces, limiting displacements, and all possible modes of vibration.

6.2 A machinery block foundation supported on soil shall have a minimum mass ratio of three times the mass of the machinery for centrifugal and rotary screw machines and five to ten times the mass for reciprocating machines,

unless analysis demonstrates that a lesser value will perform adequately. A block foundation subject to vibrations may require a dynamic analysis to ensure that the provisions of 4.11 are met.

NOTE The minimum mass ratios 3:1 and 10:1 are traditional empirical values for foundation mass to equipment mass that should be used unless a lesser amount can be demonstrated to perform adequately. Although the 3-to-10 mass ratio has been a good rule of thumb, in certain installations a dynamic analysis of the rectangular concrete foundation may be necessary to adequately predict its behavior.

6.3 The foundation must be of sufficient width to prevent rocking and adequate depth to permit properly embedded anchor bolts. The width of the foundation shall be at least 1.5 times the vertical distance from the base to the machine centerline, unless analysis demonstrates that a lesser value will perform adequately.

NOTE The width of the foundation should be at least 1.5 times the vertical distance from the base to the machine centerline, unless analysis demonstrates that a lesser value will perform adequately.

6.4 The foundation shall be of sufficient width to accommodate the grout between the edge of the mounting plate and the edge of the foundation.

6.5 The foundation shall provide a minimum factor of safety of 1.5 against overturning and sliding due to all applied forces and couples.

NOTE A larger factor of safety may be required depending on the type of soil. The use of passive soil resistance around the perimeter of the foundation to aid in achieving stability must be used with caution. The designer may decide to neglect the contribution of passive resistance to stability if the possibility exists of soil loss due to excavation or erosion around the foundation after it is constructed. The removal of soil around the foundation will result in loss of the passive soil pressure component.

6.6 The top of the finished foundation shall be elevated a minimum of 100 mm (4 in.) above the finished elevation of the floor slab or grade to prevent damage to the machinery from runoff or wash-down water.

6.7 Unless permitted by the equipment user, the minimum reinforcing steel in a general-purpose block foundation shall be, as a minimum, that required by ACI 318 to resist all forces or for shrinkage and temperature. Reinforcing shall be placed on all exposed faces of piers supporting machinery and be continuous from face to face with proper lap splices and with a minimum of 3 in. of concrete covering the steel.

NOTE The required reinforcing steel necessary to resist the internal forces and moments is relatively small in the majority of block foundations because of their massive size. Therefore, the minimum quantity of steel will likely be controlled by the amount of steel necessary to meet temperature and shrinkage requirements. Although ACI 318 does not specifically address the required steel in a block foundation, the requirement of 0.18 % of the cross-sectional area of the concrete may be used as guidance for the amount of temperature reinforcing steel in a foundation using grade 60 reinforcing. In the event that a foundation size greater than 1.20 m (48 in.) thick is required for stability, rigidity, or damping, the minimum reinforcing steel may be as suggested in ACI 207.2R, *Effect of Restraint, Volume Change, and Reinforcement on Cracking of Massive Concrete*, with a suggested minimum reinforcement of 22.2 mm (#7) bars at 30 cm (12 in.) on center.

6.8 The maximum reinforcing bar spacing for perimeter reinforcing shall not exceed 300 mm (12 in.) on center, and the minimum bar size shall not be less than 12.7 mm (#4).

NOTE Tie bars of 9.5 mm (#3) may be used for spiral wound reinforcements. Reinforcing cages from shop fabrication can often be less expensive and require less field erection time. These shops typically use #3s.

6.9 Block foundations for reciprocating machines (compressors, and so forth) shall be embedded adequately into the soil for lateral restraint and damping as quantified by foundation dynamic analysis.

NOTE 1 Typically the embedment depth will range from 20 % to 50 % of the total depth of the foundation.

NOTE 2 A typical rectangular block foundation detail is shown in Annex B, Figure B.1.

7 Vertically Suspended Pump Foundation Design

7.1 The foundation shall be designed so that the pump can or base is directly attached to a mounting plate and is removable without damaging the grout.

NOTE This requires that the pump be provided with an engineered mounting plate that is grouted to the foundation.

7.2 The foundation must be designed with inner foundation liners to prevent water from contacting the pump can. The foundation must be watertight. Drain holes or openings in the foundation are not acceptable unless positive drainage can be assured. Consideration must be given to ground water table proximity to the vertical suspended can pump foundation to determine if there is a need for anchoring.

7.3 A minimum annular clearance of 50 mm (2 in.) between the outside of the pump can and the inner liner surface of the foundation cavity shall be maintained unless otherwise specified.

NOTE Pumps in low-temperature service that require insulation (and possibly heating outside of the can to avoid ice formation) will need greater clearance to accommodate finished insulation dimensions and piping that may be external to the pump can.

7.4 The foundation shall be designed to allow sufficient axial clearance to the pump can to prevent distortion due to thermal growth. The bottom surface of the cavity shall be at least 300 mm (1 ft) beneath the bottom of the pump can (refer to the typical suspended can pump detail in Annex B, Figure B.2).

8 Elevated Frame Foundation Design

8.1 A dynamic analysis of an elevated frame foundation (table-top foundation) shall be required to demonstrate that the natural frequencies of the foundation do not coincide with and are separated from the operating speed range of the equipment by at least 20 %. The foundation design for variable-speed equipment will require that the foundation be checked for resonant frequencies through the entire range of operating speeds.

8.2 Condensers and turbines shall be supported on a common foundation.

8.3 The height of an elevated frame foundation shall be kept to a minimum. The height shall be determined by the minimum number of straight runs of process piping, the required slope of the lube oil drain piping, or other mechanical and maintenance requirements.

9 Effects of Equipment Design on Surrounding Area

9.1 The effects of vibrating equipment on the surrounding area shall be investigated. Consider the location and degree of isolation required for the foundation with respect to adjacent sensitive equipment, disturbance to people, and the effects to the supporting and/or adjoining structures.

NOTE The effects of vibration generated by the equipment on the operation of adjacent equipment or people must be factored into the location of the equipment. In addition to taking measures to isolate the foundation from an adjacent slab or structure in the early stages of the project, it may be possible to locate the equipment to reduce the transmission of vibrations to the surroundings. The actual method of isolating the foundation from adjacent structures is left to the designer. The intent of this provision is to call attention to the need for foundation isolation due to vibration generated by the machinery.

9.2 The effects foundation construction may have on adjacent equipment, people, egress requirements, existing foundations supporting adjacent structures, and manufacturing production shall be considered in the design stages. All necessary precautions shall be taken in the design to protect the safety of personnel directly exposed to the construction or working in the vicinity of construction.

NOTE One of the best times to address the effects that construction may have on the existing facility and personnel in the area is during the initial design stages. Proper location of the foundation may reduce the construction difficulties associated with protecting personnel and maintaining existing production.

10 Concrete Design

10.1 Foundation materials shall be selected to prevent premature deterioration due to chemical attack or exposure to oil. In an aggressive environment, consider the use of protective coatings such as galvanizing or epoxy, polymer concrete, silica fume, calcium nitrite, and/or additional concrete cover to protect the reinforcing steel.

NOTE Silica fume and fly ash admixtures can reduce concrete permeability. Calcium nitrite protects the steel and reduces permeability, so it should be used in combination with silica fume and/or fly ash.

10.2 All concrete shall have a minimum compressive strength of 28 megapascals (4000 lb/in.^{2}) at 28 days, unless otherwise specified by the user. Concrete mix shall contain air entraining agent sufficient to produce 4 % to 6 % entrained air. Other additives such as fly ash, silica fume, and calcium nitrite shall be considered and if required, specified on the plans.

NOTE Use of fly ash as a substitute for up to 30 % of the Portland cement is encouraged to reduce thermal effects and decrease permeability.

10.3 High early strength concrete shall not be used unless approved by the equipment user. If early strengths are desired for stripping forms or placing equipment, use mid to high range water reducing additives to achieve rapid placement and achieving early strengths.

10.4 When foundation thicknesses are greater than 120 cm (48 in.) thick, the engineer shall consult ACI 207.2R and other ACI mass concrete requirements for concrete mixes and installation.

11 Anchor Bolt and Reinforcing Steel Design

11.1 Unless otherwise specified by the equipment user, all reinforcing steel shall conform to the requirements of ASTM A615, *Standard Specification for Deformed and Plain Billet-Steel Bars for Concrete Reinforcement*, Grade 60 with a minimum yield strength of 414 megapascals (60 kips per in.^{2}).

11.2 Unless otherwise specified by the equipment user, equipment shall be installed on mounting plate(s), and the direct attachment of equipment feet to the foundation using the anchor bolts shall not be permitted. Mounting plates shall be of sufficient strength and rigidity to transfer the applied forces to the foundation.

NOTE Anchor bolts extending through equipment feet are typically permitted on large reciprocating compressors and similar equipment with high vibrating forces.

11.3 Mounting plates shall be attached to the foundation with anchor bolts in accordance with 11.7.

11.4 Anchor bolts alone or in combination with shear attachments on the equipment mounting plate shall be capable of transmitting the loading applied by the machinery and the design loads specified in 4.9 combined to produce the most unfavorable effects. The transfer of forces by means of grout adhesion of the baseplate to the foundation shall not be considered in the design.

11.5 The intent of 11.4 is to neglect the contribution of the grout bond strength for transferring forces from the mounting plate to the foundation. Although this adhesion may exist, a positive means of attachment by anchor bolts and/or shear keys is required.

11.6 The required embedment of anchor bolts in the foundation shall be determined by accepted engineering practices for cast-in-place anchors or certified vendor information for mechanical or adhesive type anchors. The anchor bolt embedment shall be adequate to resist the torque values specified in the grouting section of this RP or the forces applied by the equipment or required by applicable codes.

NOTE The design of anchor bolt embedment may be as suggested in ACI 349, *Code Requirements for Nuclear Safety Related Concrete Structures—Steel Embedments*, Appendix B, Figure B.3 and Figure B.4 or ACI 318-02.

11.7 Unless otherwise specified by the equipment user, anchor bolt material shall be ASTM F1554 Grade 36 (for general-purpose anchor bolts) or Grade 105 (for high strength special-purpose anchor bolts). and shall be hot-dipped galvanized in accordance with ASTM A153. Galvanizing preparation on Grade 105 steel shall be abrasive blasting, since acid pickling may contribute to hydrogen embrittlement in high strength steels.

NOTE The anchor bolt material selected for use, whether it is the material specified in 11.7 or another material, should be clearly marked on the structural drawings. This information is not only required for fabrication but will be helpful in future modifications to the foundation. It may be necessary to fabricate the anchor bolts from a material that will be capable of resisting the attack of an aggressive environment. Not only is this necessary to prevent the reduction of the anchor bolt net section, but it will also facilitate the future removal of the equipment for maintenance.

11.8 Anchor bolts shall be installed using sleeves, unless otherwise specified by the equipment user. The inner diameter of the sleeve shall be at least twice the diameter of the anchor bolts. The length of the sleeve shall be the greater of 150 mm (6 in.) or sufficient length to permit adequate elongation of the anchor bolt during tightening. The minimum distance from the edge of the anchor bolt sleeve to the edge of the foundation shall be the greater of 150 mm (6 in.), four anchor bolt diameters, or the edge distance necessary to transfer the forces in the anchor bolts to the concrete foundation.

NOTE 1 Anchor bolt sleeves are required to permit a section of the bolt to be protected from concrete or grout adherence. This section of the bolt is kept free from the concrete and grout to permit the proper elongation of the anchor bolt during the tightening procedure. Generally a stretch length of 10 to 15 bolt diameters is adequate for tensioning. As shown in Figure A.3 and Figure A.4 of Annex A, the bolt head must extend a minimum of 5 bolt diameters below the bottom of the sleeve. This will allow adequate room for the concrete anchorage cone to develop. Also the portion of the anchor bolt above the top of the sleeve to the bottom of the mounting plate must be protected from grout adherence to allow for “stretching” of the anchor bolt. Typically, urethane foam pipe insulation is used for this purpose. The use of anchor bolt sleeves is not primarily intended to permit easy bending of the bolt to aid in equipment alignment, but to allow the elongation to take place.

NOTE 2 Additional details and requirements on anchor bolt preparation for grouting is specified in Chapter 5 of this standard.

11.9 Anchor bolts for machinery shall be cast-in-place or adhesive stud bolt with nut(s) and washer, unless otherwise specified by the equipment user. The washer shall conform to ANSI B18.22.1 and nut(s) shall be full size, heavy hex conforming to ANSI B18.2.2.

11.10 Anchor bolts shall project a minimum of 2 threads above the fully engaged nut(s).

12 Drawing Design Information

12.1 In addition to the structural information necessary to construct the foundation, the drawings must clearly indicate the elevation of the top of the finished (poured) foundation and the bottom of the mounting plate, the locations of the anchor bolts and sleeves, the anchor bolt diameter, the depth of embedment into the foundation of the anchor bolts, the length of the anchor bolts threads, and the length of the anchor bolt projections.

NOTE The above information should be clearly marked on the drawing in order for it to be readily identified during the final checks before concrete placement. Refer to the typical foundation detail in Annex B, Figure B.1, to clarify the location of the finished foundation level.

12.2 The required 28-day minimum compressive strength of the concrete foundation and the yield strength of the reinforcing steel shall be clearly specified on the structural drawings. The required admixtures such as air entraining agent, fly ash, silica fume, calcium nitrite, maximum aggregate size and reinforcing bar coatings shall be specified on the structural drawings.

NOTE Not only is this information necessary for construction of the foundation, it may be necessary in the future to identify the material properties for possible modifications or investigations of the foundation. Placing this information on the drawings will permit its permanent retention with the foundation structural details.

12.3 The anchor bolt material shall be specified on the structural drawing.

12.4 The required soil bearing capacity shall be specified on the structural drawings.

13 Machinery Foundation Installation

13.1 Unless otherwise indicated, this RP addresses the general considerations for the installation of soil-supported reinforced concrete foundations supporting general- and special-purpose machinery.

13.2 Any conflicts between this RP, the engineering drawings, the equipment manufacturer's specifications, other specifications referenced in this RP, and the contract documents shall be brought to the attention of the equipment user for resolution.

14 General Installation Requirements

14.1 This section provides guidelines for the construction of reinforced concrete foundations. Proper concrete preplacement and placement procedures are essential to the successful installation of machinery foundations.

14.2 Construction of the foundation shall be performed in a safe manner and shall be subject to all OSHA (and/or other local) safety requirements.

14.3 Excavations for the foundation shall be made safe to prevent any danger to personnel or existing structures.

14.4 The user shall be advised if construction of the foundation will block an existing means of emergency egress for personnel and/or safety equipment.

15 Soil Condition Installation

15.1 Foundations designed to be directly supported on soil shall be constructed on undisturbed soil or fill material properly compacted in accordance with sound engineering practices and the project specifications.

NOTE The statement "sound engineering practices" requires that the fill be constructed from suitable fill material that has been properly installed and compacted under the guidance of a qualified soil engineer.

15.2 Unless otherwise specified, the contractor shall require a qualified soil specialist to inspect the soil supporting the foundation and determine its adequacy to provide the required bearing capacity. The contractor shall provide the equipment user with written documentation by the qualified soil specialist certifying the soil supporting the foundation has the minimum specified bearing capacity.

NOTE This will require the soil beneath the foundation to be examined by a qualified soil specialist or geotechnical engineer suitable to the equipment user before proceeding with the construction of form work or placement of concrete. It may also require that a test be performed to verify the safe bearing capacity of the soil.

15.3 Unless otherwise specified, prior to the start of construction, the contractor shall submit to the equipment user for acceptance and review the qualifications of the person responsible for performing the soil inspection specified in 15.2.

16 Formwork Installation

16.1 All formwork and form accessories shall be in accordance with ACI 301 and PIP STS03001.

NOTE ACI 301, *Specifications for Structural Concrete for Buildings*, and PIP STS03001, *Plain and Reinforced Concrete*.

16.2 Unless otherwise indicated on the contract drawings, provide minimum 19 mm ($^3/_4$ in.) chamfer strips at all corners on permanently exposed surfaces or on edges of formed joints.

16.3 Unless otherwise specified by the equipment user, removal of formwork shall be in accordance with ACI 301 and PIP STS03001.

17 Reinforcing Steel Installation

17.1 Reinforcing steel materials, fabrication, and placement shall be in accordance with ACI 301 and PIP STS03001.

17.2 Unless otherwise noted on the structural drawing, all reinforcing steel shall conform to the requirements of ASTM A615, *Standard Specification for Deformed and Plain Billet-Steel Bars for Concrete Reinforcement*, Grade 60, with a minimum yield strength of 414 megapascals (60 kips/in.^{2}).

18 Anchor Bolts and Sleeve Installation

18.1 Anchor bolts and sleeves shall be located to the manufacturer's specified tolerances in all three planes and securely supported to prevent misalignment during the concrete placement operation. The anchor bolts shall not be reduced in diameter nor offset to facilitate alignment with the mounting plate. Modification of the mounting plate to facilitate alignment is not permitted unless authorized by the designated machinery representative.

18.2 The use of a template to aid in the placement of anchor bolts is recommended. The template will assist in accurately placing the anchor bolts.

19 Field Verification Prior to Concrete Placement

19.1 Immediately prior to concrete placement, the anchor bolt locations, projections, and diameters shall be field verified to match the anchor bolt hole location in the mounting plate. In the event that the baseplate is not at the site, the anchor bolts' location shall be verified against the structural foundation drawings and the manufacturer's drawings. The anchor bolts shall also be examined to verify that they have been installed plumb, have the correct length and projection, are adequately secured to prevent displacement during the concrete placement, and the threads are not stripped or damaged. All necessary procedures shall be taken to correct any discrepancies or deficiencies before concrete operations shall be permitted to begin.

19.2 All anchor bolt exposed threads and sleeves shall be covered or filled with a nonbonding moldable material to prevent entry of concrete.

19.3 Prior to concrete placement, the proposed elevation of the top of the foundation concrete shall be verified with the elevation specified on the foundation drawing, and the necessary procedures shall be taken to correct any discrepancies.

20 Concrete Mixing and Placement Procedures

20.1 Concrete materials, formwork, handling, mixing, and placement shall conform to ACI 301 and PIP STS03001.

20.2 Materials, mixing, handling, and placement of mass concrete shall be in accordance with ACI 301 and PIP STS03001. Adequate control of the concrete temperature shall be maintained at the pour point.

20.3 Unless otherwise specified on the drawings, at the point of delivery, concrete shall have maximum slump of 100 mm (4 in.) when achieved by water alone. If a slump greater than 100 mm (4 in.) is required for proper placement of concrete, it may be increased up to 200 mm (8 in.) using a high-range water-reducing agent.

20.4 The field addition of water to increase the slump shall not be permitted without approval of the equipment user.

20.5 Foundations shall be made in one continuous pour unless otherwise approved by the equipment user or shown on the drawings.

20.6 Immediately after placement, concrete shall be protected from cold or hot weather extremes, mechanical injury, and premature drying and shall be cured as specified in ACI 301 and PIP STS03001.

NOTE ACI 301, *Specifications for Structural Concrete for Buildings*, requires that normal concrete be cured (preservation of moisture) for seven days after placement.

20.7 Unless otherwise approved by the equipment user, the foundation preparation procedures for grouting specified in the grouting section of this specification or the setting of any equipment on the foundation shall not be permitted to begin until concrete curing in accordance with ACI 301 and PIP STS03001 has been completed, and the concrete has attained the specified 28-day compressive design strength as defined in ACI 301.

NOTE The ability of concrete to reach the specified strength is a function of temperature and moisture retention. Normal concrete, when properly cured, will attain the specified design strength approximately 28 days after placement. The concrete shall be presumed to have reached the specified compressive design strength when the requirements of ACI 301 for removal of formwork have been met. If approved by the equipment user, the use of high early strength concrete may be used to reduce the duration time required to reach the desired strength in situations where cure time is on the critical path. Refer to ACI 301 and ACI 308 for additional information on curing concrete.

20.8 All concrete shall have a minimum compressive strength of 28 megapascals (4000 lb per in.^{2}) at 28 days, unless otherwise specified on the drawings.

20.9 High early strength concrete shall be used only with the approval of the equipment user.

21 Concrete Quality Control

The equipment user or the designated machinery representative reserves the right to subject the concrete foundation construction to inspection by an ACI-certified inspector or any user-designated testing agency. Tests of concrete compressive strength, air content, and slump shall be as designated by the equipment user, designated machinery representative, or in accordance with PIP STS03001 and ACI 301.

Annex A
(normative)

Machinery Foundation Checklist

Section	Requirements	Name	Date
4	**General Design Requirements**		
4.2	All machinery supported on reinforced concrete foundation?		
4.3	Design of foundation in accordance with manufacturer's recommendations?		
4.5	Elevation to top of foundation allows for adequate grout thickness?		
4.6	Bottom of foundation adequate to protect from frost penetration?		
4.7	Multiple machines mounted on common mat?		
4.8	Concrete design in accordance with ACI 318?		
4.10	Foundation design considers all possible combinations of most unfavorable loading?		
4.11	Foundation design resonance at least 20 % removed from operating speeds of mounted machinery?		
4.12	Machinery load directly supported by concrete and NOT platforms?		
4.13	Driver and driven equipment mounted on common foundation?		
4.14	Foundations dynamically analyzed in accordance with 4.14?		
4.15	Multiple reciprocating trains with crankshafts parallel to each other?		
4.16	Machinery components on common foundation with main machine?		
5	**Geotechnical Design**		
5.1	Topsoil bearing loads considered in foundation design?		
5.2	Foundation design approved by geotechnical engineer?		
5.3	Dynamic loading less than 75 % of soil bearing capacity?		
6	**Rectangular Block Foundation Design**		
6.2	Foundation minimum design mass ratios met?		
6.3	Foundation of adequate width and depth?		
6.4	Adequate width for grout allowance?		
6.5	Minimum overturning factor of safety of 1.5?		
6.6	Minimum 4 in. foundation-to-grade height to allow for drainage?		
6.7	Reinforcing steel in accordance with ACI 318 with minimum concrete coverage of 3 in.?		
6.8	Maximum spacing and re-bar diameter requirements met?		
7	**Vertically Suspended Pump Foundation Design**		
7.1	Design employs a mounting plate and pump is removable without damaging grout or foundation?		
7.2	Design employs inner foundation liner to prevent water contact with pump can?		
7.3	Foundation liner and can has minimum clearance of 50 mm (2 in.)?		
7.4	Bottom of foundation-to-can clearance of 300 mm (12 in.)?		
8	**Elevated Frame Foundation Design**		
8.1	Foundation design resonance at least 20 % removed from operating speeds of mounted machinery?		

Section	Requirements	Name	Date
8.2	Condensers and turbines supported on a common foundation?		
8.3	Foundation height minimized as much as possible?		
9	**Design Effects of Equipment on Surrounding Area**		
9.1	Vibrating equipment location takes into consideration adjacent sensitive equipment, control rooms/people, adjacent structures, etc.?		
9.2	Ingress and egress requirements considered?		
10	**Concrete Design**		
10.1	Concrete materials suitable for area environment?		
10.2	Minimum 28 day compressive strength of 28 megapascals (4000 psi)?		
10.4	Foundations over 120 cm (48 in.) thick comply with ACI 207.2R?		
11	**Anchor Bolt and Reinforcing Steel Design**		
11.1	Reinforcing steel in accordance with ASTM A615?		
11.2	Anchor bolts permitted to extend through equipment feet?		
11.3	Mounting plates properly attached to foundation?		
11.4	Anchor bolt design considers all applied loads?		
11.6	Anchor bolt embedment length correct?		
11.7	Anchor bolt material of construction correct?		
11.8	Anchor bolts installed in sleeves of sufficient length?		
11.10	Anchor bolt projection above nuts correct?		
12	**Drawing Design Information**		
12.1	All locating and elevation information properly indicated?		
12.2	28 day compressive strength specified?		
12.3	Anchor bolt material specified?		
12.4	Soil bearing capacity specified?		
14	**General Installation Requirements**		
14.2	Foundation and formwork safe and in accordance with all requirements?		
14.3	Excavations are safe to personnel and existing structures?		
14.4	Adequate emergency egress?		
15	**Soil Condition Installations**		
15.2	User has been supplied with written documentation from qualified soils specialist certifying that the soil is adequate to provide required bearing capacity?		
16	**Formwork Installation**		
16.1	Formwork and form accessories are in accordance with ACI 301 and PIP STS03001?		
16.2	Chamfer strips have been provided at all permanently exposed edges?		
16.3	Formwork removal is in accordance with ACI 301 and PIP STS03001?		
17	**Reinforcing Steel Installation**		
17.1	Reinforcing steel materials, fabrication, and placement is in accordance with ACI 301 and PIP STS03001?		
17.2	Reinforcing steel conforms to ASTM A 615?		
18	**Anchor Bolts and Sleeve Installation**		

Section	Requirements	Name	Date
18.1	Anchor bolts and sleeves are located within the manufacturer's specified tolerances?		
18.2	Anchor bolts and sleeves are securely supported to prevent misalignment during concrete placement?		
19	**Field Verification Prior to Concrete Placement**		
19.1	Anchor bolt locations, projections, and diameters match the anchor bolt holes in mounting plate?		
19.2	Anchor bolt exposed threads covered and sleeves filled with soft moldable material?		
19.3	Elevation of top of concrete pour line agrees with the elevation specified on the foundation drawings?		
20	**Concrete Mixing and Placement Procedures**		
20.1	Concrete materials, formwork, handling, mixing, and placement conforms to ACI 301 and PIP STS03001?		
20.2	Concrete temperature is adequately controlled for mass concrete placement?		
20.3	Concrete slump has been measured and meets specifications?		
20.4	Water has NOT been added in the field to increase slump?		
20.5	Foundations made in one continuos pour?		
20.6	Concrete is protected and cured as specified in ACI 301?		
20.7	Concrete curing and strength adequate for grouting?		
20.8	Minimum concrete compressive strength meets specification?		
20.9	If high early strength concrete used, approval from equipment user was attained?		
21	**Concrete Quality Control**		
	Tests of concrete compressive strength, air content, and slump as specified?		

Annex B
(informative)

Typical Foundation and Anchor Bolt Details

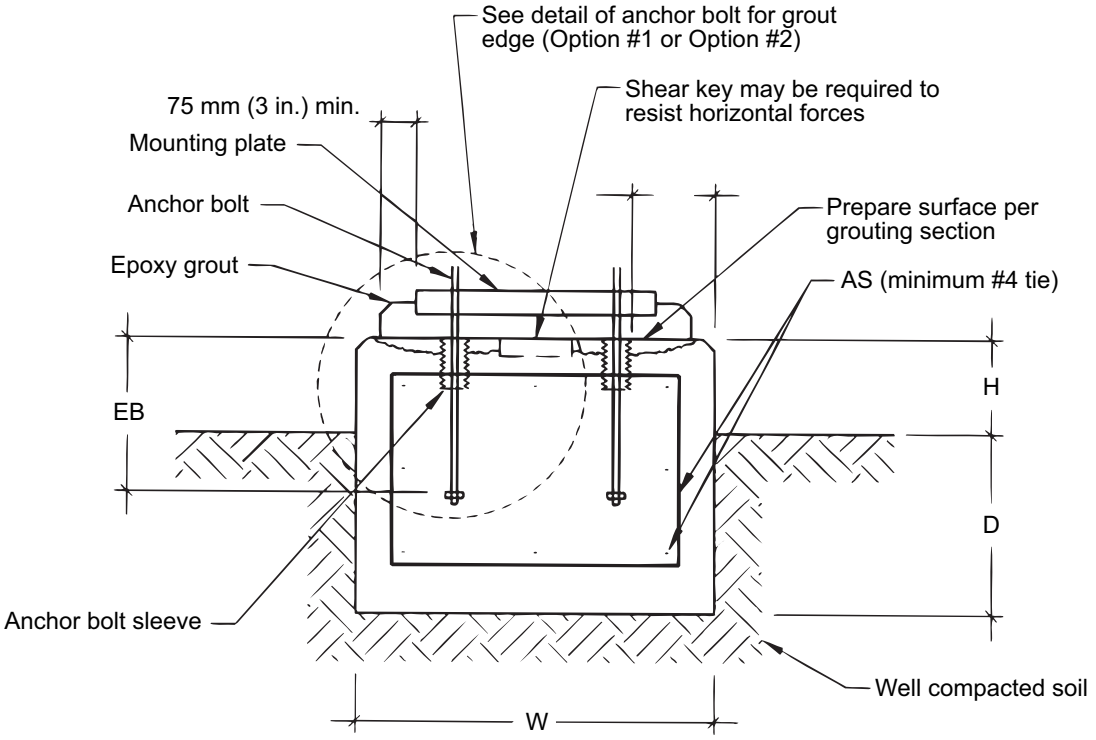

Section Through Foundation

W	Width	Refer to foundation design section of specification
EB	Anchor Embedment	Shall be as required to resist anchor bolt forces
D	Depth Below Grade	Shall be adequate to prevent frost heave
H	Depth Above Grade	Shall be adequate to prevent damage to equipment from water due to runoff [100 mm (4 in.) minimum]
AS	Area of Reinforcing	Refer to the minimum area of steel requirements of the reinforcing section of foundation design
ED	Anchor Bolt Sleeve Edge Distance	Shall be adequate to develop required force on anchor bolt, a minimum of 150 mm (6 in.) or (4) bolt diameters (whichever is greater), or as recommended by anchor bolt manufacturer.

Figure B.1—Typical Rectangular Block Foundation Detail

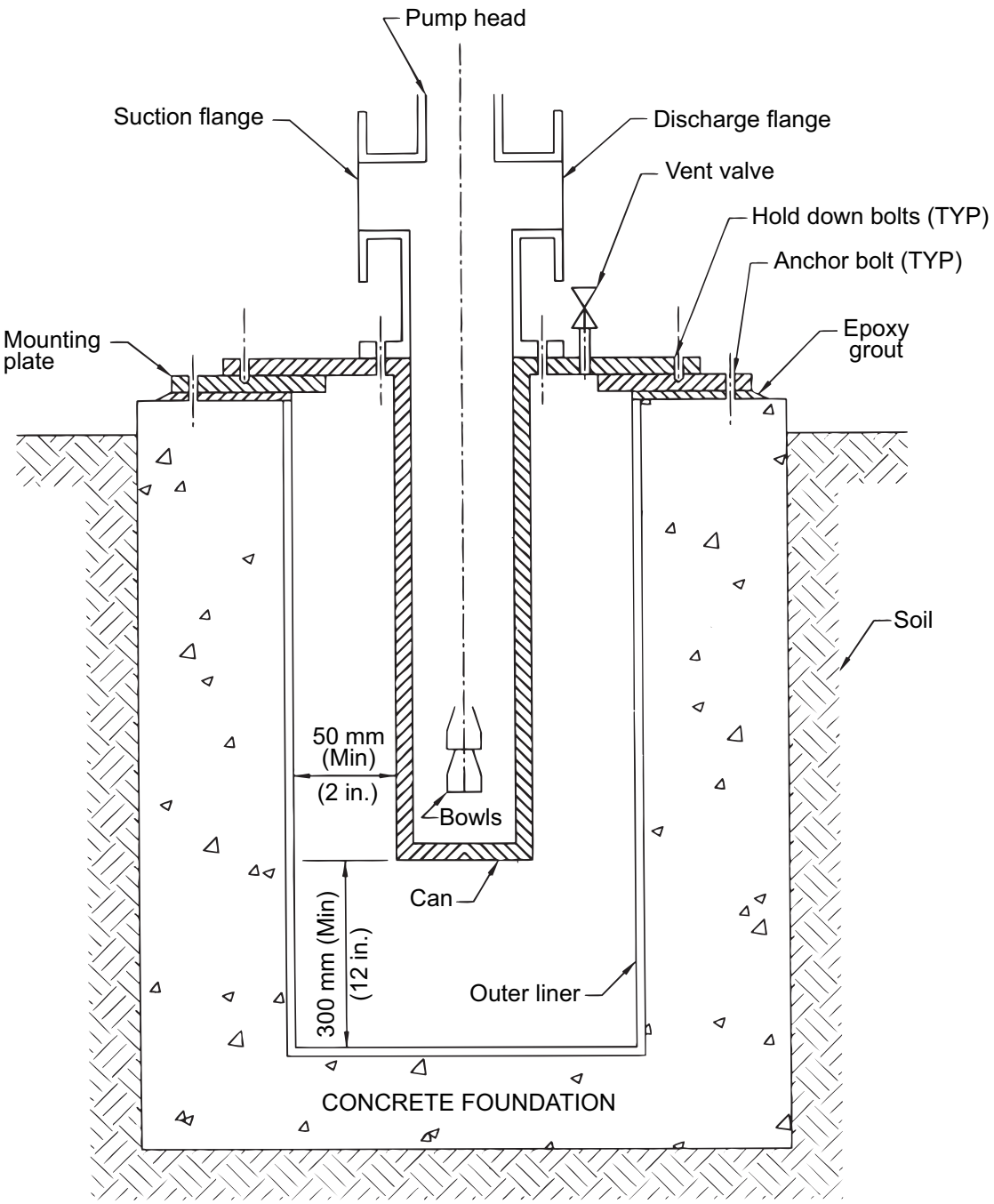

NOTE Can = Pressure Retaining Casing

Figure B.2—Typical Vertically Suspended Can Pump Foundation

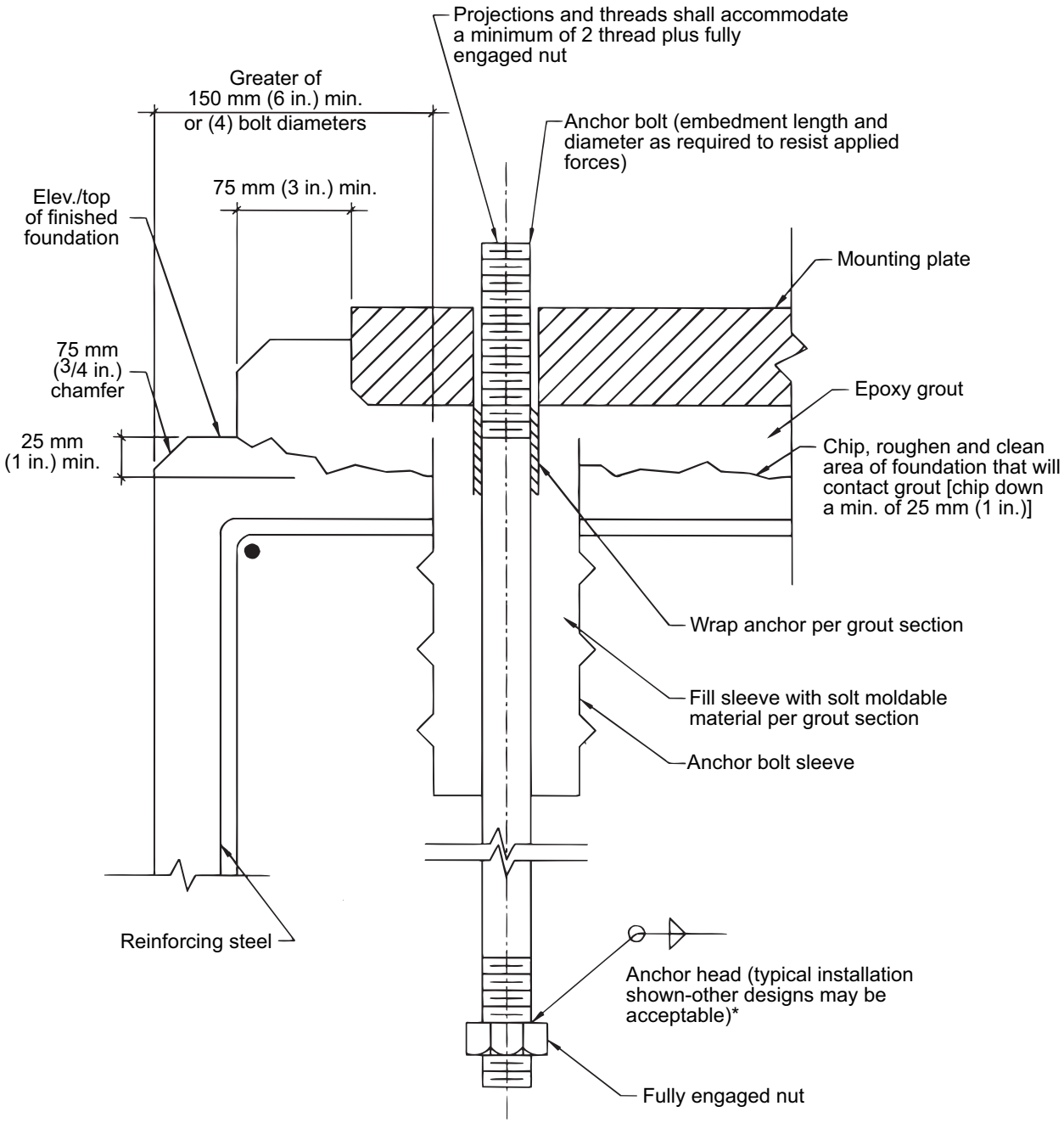

NOTE ACI 349 may be a possible design reference for anchor head.

Figure B.3—Typical Anchor Bolt Detail—Option 1, Grout Pour Not to Edge of Foundation

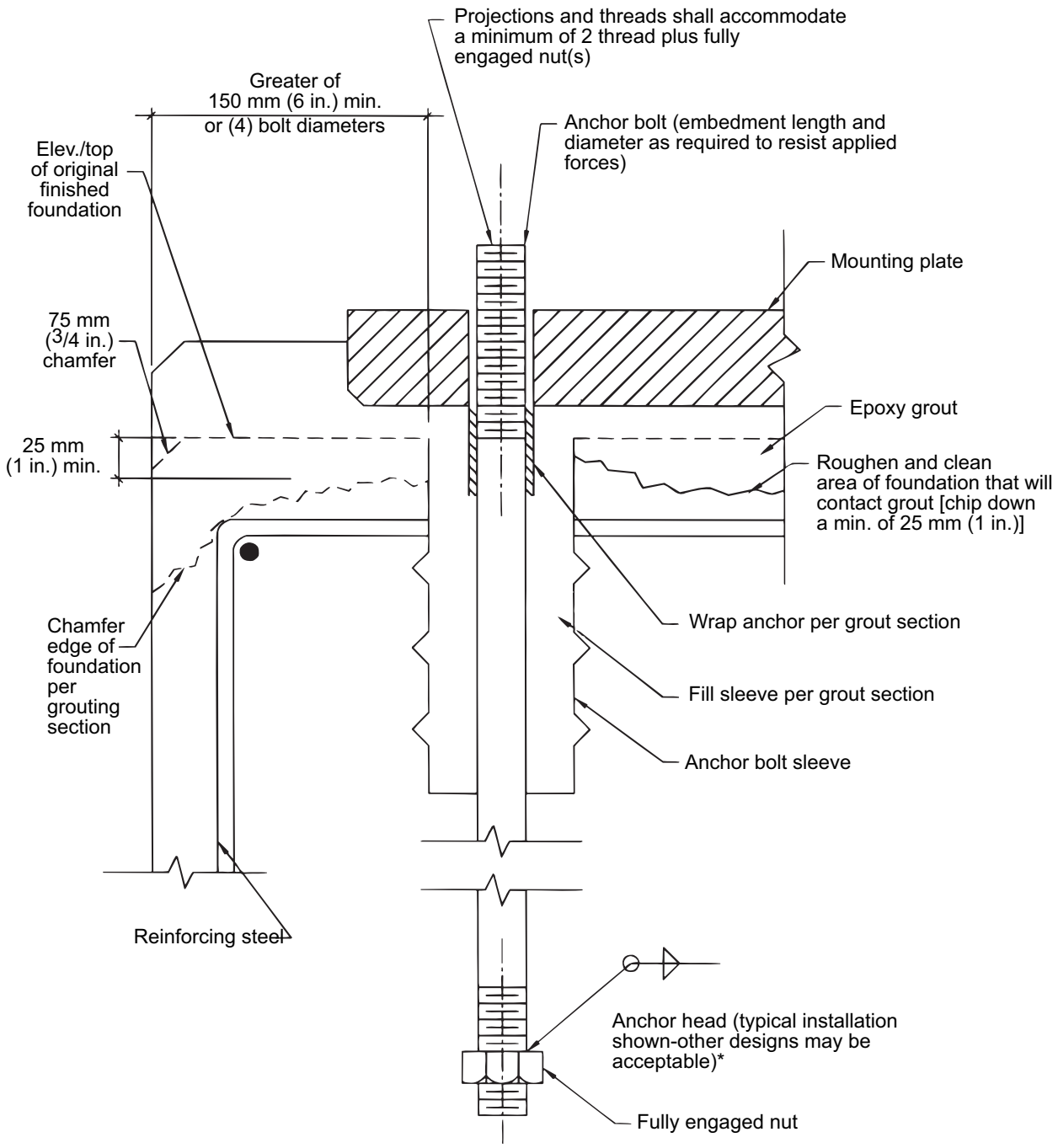

NOTE ACI 349 may be a possible design reference for anchor head.

Figure B.4—Typical Anchor Bolt Detail—Option 2, Grout Pour to Edge of Foundation

Recommended Practice for Machinery Installation and Installation Design

Chapter 5—Mounting Plate Grouting

Downstream Segment

API RECOMMENDED PRACTICE 686
SECOND EDITION, DECEMBER 2009

American Petroleum Institute

Contents

Page

1 Definitions 5-1

2 Machinery Grouting Installation Design Requirements 5-2
2.1 Scope 5-2
2.2 General/Special-purpose Equipment 5-2
2.3 Drawing and Data Requirements 5-3
2.4 Selection of Grout 5-3
2.5 Expansion Joints 5-4
2.6 Mounting Plate Design 5-4
2.7 Grout Design for Auxiliary Equipment 5-5
2.8 Grout Design and Application of Pregrouted Baseplates 5-5

3 Machinery Grouting Installation Requirements 5-6
3.1 Scope 5-6
3.2 General/Special-purpose Equipment 5-7
3.3 Grouting Precautions and Personnel Protection 5-7
3.4 Foundation Curing 5-7
3.5 Anchor Bolt Preparation 5-7
3.6 Foundation Preparation Prior to Grouting 5-8
3.7 Grout Forms 5-8
3.8 Conventional Mounting Plate Design Verification (Not Pre-grouted) 5-9
3.9 Preparation of Mounting Plates (Conventional and Pregrouted) 5-9
3.10 Direct Grouted Reciprocating Compressors 5-12
3.11 Pregrout Meeting 5-13
3.12 Pregrout Setup 5-13
3.13 Grout Mixing 5-14
3.14 Mounting Plate Grouting 5-14
3.15 Post-grouting Instructions 5-15
3.16 Filling Grout Voids 5-16

Annex A (normative) **Grouting Checklists** 5-17

Annex B (informative) **Anchor Bolt Torque Tables** 5-23

Annex C (informative) **Leveling Datasheet and Drawings** 5-24

Annex D (informative) **Typical Mounting Plate Arrangement for Baseplate Mounted Special-purpose Equipment** 5-26

Annex E (informative) **Baseplate Leveling for Horizontal Centrifugal Pumps (for Use When a Pump and/or its Driver are Not Removed from the Baseplate for Grouting)** 5-27

Annex F (informative) **Typical Grouting Installation of Soleplates** 5-33

Annex G (informative) **Typical Grouting of Baseplates for Pumps and Special-purpose Equipment** 5-34

Annex H (informative) **Typical Mounting Plate Leveling Pads** 5-35

Annex I (informative) **Optical Leveling Scope Peg Test** 5-36

Figures
C.1 Typical Mounting Plate Layout for Elevation and Level Measurement 5-24
C.2 Typical Soleplate Layout for Elevation and Level Measurement 5-24
D.1 Typical Mounting Plate Arrangement for Baseplate Mounted Special-purpose Equipment 5-26
E.1 Baseplate Top View 5-28

Page

E.2 Leveling Pump End Crosswise 5-28
E.3 Leveling Driver End Crosswise 5-29
E.4 Leveling Driver End Lengthwise 5-29
E.5 Leveling Pump End Lengthwise 5-30
E.6 Baseplate Top View (Typical) 5-30
E.7 Leveling Pump End Crosswise 5-31
E.8 Leveling Driver End Crosswise (Typical) 5-31
E.9 Leveling Driver End Lengthwise (Typical) 5-32
E.10 Leveling Pump End Lengthwise 5-32
F.1 Typical Grouting Installation of Soleplates. 5-33
G.1 Typical Grouting Installation of Baseplates for Pumps and General-purpose Equipment. 5-34
H.1 Typical Mounting Plate Leveling Pads 5-35
I.1 Peg Test Diagram. 5-37

Tables

B.1 30,000 psi Internal Bolt Stress 5-23
B.2 2110 kg/cm Internal Bolt Stress 5-23

Recommended Practice for Machinery Installation and Installation Design
Chapter 5—Mounting Plate Grouting

1 Definitions

For the purposes of this document, the following standard definitions apply.

1.1
cementitious
A type of grout material that is hydraulic cement based.

1.2
designated machinery representative
The person or organization designated by the ultimate user of the equipment to speak on the user's behalf with regard to machinery installation decisions, inspection requirements, and so forth. This representative may be an employee of the user, a third-party inspection company, or an engineering contractor delegated by the user.

1.3
engineering designer
The person or organization charged with the project responsibility of supplying installation drawings and procedures for installing machinery in a user facility after machinery has been delivered. In general, but not always, the engineering designer specifies machinery in the user facility.

1.4
epoxy
A type of grout material that consists of a resin base that is mixed with a curing agent (hardener) and usually an aggregate filler.

1.5
equipment installer
The person or organization charged with providing engineering services and labor required to install machinery in a user facility after machinery has been delivered. In general, but not always, the installer is the project construction contractor.

1.6
equipment user
The organization charged with operating the rotating equipment. In general, but not always, the equipment user owns and maintains the rotating equipment after the project is complete.

1.7
general-purpose equipment trains
Those trains that have all general-purpose elements in the train. They are usually spared, relatively small in size (power), or are in noncritical service. They are intended for applications where process conditions will not exceed 48 bar gauge (700 lb/in.^{2} gauge) pressure or 205 °C (400 °F) temperature (excluding steam turbines), or both, and where speed will not exceed 5000 revolutions per minute (rpm).

NOTE General-purpose equipment trains have all elements that are either manufacturer's standard or are covered by standards such as the following: ASME B73 pumps, fans; API 611 steam turbines; API 672 air compressors; API 677 general-purpose gears; API 674 reciprocating pumps; API 676 rotary positive displacement pumps, API and NEMA frame motors.

1.8
grout
An epoxy or cementitious material used to provide a uniform foundation support and load transfer link for the installation of rotating machinery. This material is typically placed between a piece of the equipment's concrete foundation and its mounting plate.

1.9
grout pin
A metallic pin or dowel used to tie an epoxy grout pour to its concrete foundation to prevent delamination (or edge lifting) due to differential thermal expansion between the grout and the concrete.

1.10
head box
A device used to funnel grout into a baseplate grout fill-hole so as to provide a static head to aid in filling all baseplate cavities with grout.

1.11
mounting plate
A device used to attach equipment to concrete foundations; includes both baseplates and soleplates.

1.12
peg test
A test performed on an optical leveling instrument to ensure that it is properly adjusted and its line of sight is coincident to true earth level (see Annex I).

1.13
special-purpose equipment trains
Equipment trains with driven equipment that is usually not spared, is relatively large in size (power), or is in critical service. This category is not limited by operating conditions or speed.

NOTE Special-purpose equipment trains will be defined by the user. In general, any equipment train such as an API 612 turbine; API 618 reciprocating compressor; API 613 gear; API 617 centrifugal compressor; API 619 rotary screw compressors; or equipment with a gas turbine in the train should be considered to be special-purpose.

2 Machinery Grouting Installation Design Requirements

2.1 Scope

Grout is a material used to fill the void between a piece of equipment's baseplate or soleplate and the mating foundation. This filler material provides uniform support and a load-transfer link between the equipment and its foundation. Thus the equipment, the foundation, and eventually the earth effectively become one system.

System is the key word. A poorly designed foundation or baseplate, or improper installation techniques, can result in chronic rotating equipment problems. These problems include high vibration, rotating assembly "rubs," poor seal life, and mechanical failures. Therefore, a machinery installation must be thought of as a system, not as a conglomeration of pieces designed independently within their own guidelines.

This section defines the minimum recommended procedures, practices, and design requirements of grouted equipment mounting plates (soleplates and baseplates). In general, the instructions supplied by the grout manufacturer should be carefully followed. Any questions regarding mounting plate grouting design are to be referred to the user-designated representative before proceeding.

All design and installation requirements shall be ensured as being complete by completing the Installation Checklist in Annex A and submitting it to the user or his designated representative.

2.2 General/Special-purpose Equipment

This section is intended to address those grouting design requirements associated with all machinery. Additional special-purpose machinery requirements are covered in the following annexes.

2.3 Drawing and Data Requirements

The designer shall produce detailed design information of the grout layout for special-purpose machinery. Grout layout drawings shall be completed during engineering design and shall be submitted to the purchaser for review. These drawings shall be included in the design package for the machinery foundation.

Grouting design drawings (or typical datasheets) shall provide all necessary information for the installation of equipment on mounting plates. This information shall include, but not be limited to, the following:

a) expansion joint location,

b) elevation to top of mounting plate,

c) elevation to top of grout,

d) grout materials and estimated quantities,

e) grout pocket location (if any),

f) grout forming details (that deviate from Annex G) and head-box elevation,

g) baseplate grouting and vent holes,

h) anchor bolt location and projection,

i) grout pin locations and quantity (if used),

j) shimming and leveling screw requirements.

NOTE These requirements do not necessarily require a separate drawing, but that this information must be provided in some fashion to the user.

2.4 Selection of Grout

Unless otherwise specified by the User, all machinery shall be grouted using epoxy grouts.

NOTE 1 Epoxies typically have over three times the compressive strength of cementitious grouts and tend to have a longer useful service life. Epoxy grouts are also available that are resistant to chemical attack.

NOTE 2 Cementitious grouts are suitable as “filler” materials in less demanding applications where vibration, dynamic loading, and temperature extremes are not a concern. This type of grout is typically used as a “filler” inside structural steel baseplates to increase damping and reduce vibration transmission or for use on “static” equipment where vibration is not a concern.

2.4.1 The use of rapid-flow grouts shall be limited to applications where the depth of the grout pour is less than 19 mm ($^3/_4$ in.). The reduction of aggregate quantity in grout mixtures to improve flow properties is not permitted. Rapid-flow epoxy grouts shall not be used unless specifically approved by the user.

NOTE Typically, rapid-flow grouts are only used for grout pours of less than 19 mm ($^3/4$ in.).

2.4.2 A layered combination of non-shrink cement and epoxy grout may be used for machinery with large baseplates that have structural webs deeper than 9 in. as follows:.

NOTE The multilayer pour does not necessarily have to be a combination of epoxy and cementitious grouts. It can be a multilayer pour of epoxy grout in accordance with the grouting manufacturers instructions as specified by the users designated representative.

a) The first layer for this type of installation shall be an epoxy grout poured to a level that is flush with the bottom of the baseplate. A primary perimeter pour is required to lock the baseplate into its leveled position and to seal the outer perimeter in preparation for the next pour. A secondary pour of epoxy grout is then required to interlock all structural members and to ensure adequate support. This is particularly important if internal stiffeners are also used to support machinery mounting surfaces.

b) The second layer shall be a non-shrink cementitious grout poured to a level that is approximately 50 mm (2 in.) from the top of the baseplate decking. The baseplate may also be completely filled with epoxy if required by the designated machinery representative. An all epoxy filled baseplate may require several pours so as to not exceed the grout manufacturer's maximum pour thickness.

c) The top layer shall be an epoxy grout and shall be poured to the top of the baseplate.

NOTE The next layer for this type of installation shall not be poured until the previous layer is properly cured.

2.5 Expansion Joints

2.5.1 Expansion joints shall be incorporated into large epoxy grout pours to reduce the possibility of cracking, especially when machinery-to-grout temperature differentials of 30 °C (50 °F) are encountered. Expansion joints should be placed at approximately 1.4 m to 2.8 m (4 ft to 6 ft) intervals in the grout foundation.

2.5.2 Expansion joints should be made from 12 mm to 25 mm ($^1/_2$ in. to 1 in.) thick closed-cell neoprene foam rubber. Polystyrene may also be used. Ensure that the expansion joint material is compatible with the grout.

2.5.3 Expansion joints require sealing after the grout has cured with elastic epoxy seam sealant (liquid rubber) or silicone rubber room temperature vulcanizable (RTV).

2.6 Mounting Plate Design

NOTE The purpose of this section is to provide the foundation designer with mounting plate design criteria necessary for proper installation.

2.6.1 Unless otherwise specified by the user or his/her designated representative, all equipment shall be installed on mounting plates.

2.6.2 All soleplate outside corners shall have a minimum 50 mm (2 in.) radius (in the plan view) to prevent cracking of the foundation grout due to stress concentration at the corners. All baseplates shall have radiused corners appropriate to the baseplate design.

2.6.3 All mounting plate anchor bolt holes shall have a minimum 3 mm ($^1/_8$ in.) diametral clearance with the anchor bolt to allow for field alignment of mounting plates.

2.6.4 Mounting plate machined surfaces shall extend at least 25 mm (1 in.) beyond the outer three sides of equipment feet as installed.

NOTE This provides sufficient area for leveling.

2.6.5 Mounting plates shall be provided with vertical leveling screws, as opposed to shims or wedges. Shims and wedges shall not be used.

NOTE Shims and wedges, if left in place after grouting, may cause "hard" spots that interfere with the grout's ability to provide uniform base support. They may also allow moisture penetration and the resultant corrosion and grout spalling.

2.6.6 Elevation adjustment screws are not permitted under the mounting plate that will be grouted in and become a permanent part of the foundation. This allows the mounting plate to be supported by the grout, not by the leveling devices.

2.6.7 Mounting plate leveling jackscrews should be provided with leveling pads as shown in Annex H.

2.6.8 Typical mounting plate jackbolt arrangements for leveling are shown in Annex F and Annex G.

2.6.9 The bottom of baseplates between structural members should be open. When the baseplate has a covered top and is to be grouted, it should be provided with at least one grout hole having a clear area of at least 0.01 m^2 (20 $in.^2$) and no dimension less than 10 cm (4 in.) in each bulkhead section. These holes shall be located to permit grouting under all load-carrying structural members. Where practical for general-purpose equipment, the holes shall be accessible for grouting with the equipment installed and should have 12 mm ($^1/_2$ in.) raised-lip edges. Baseplate requirements stated in various API equipment standards (e.g. API 610, API 676, and API 685) supersede these requirements.

Vent holes of at least 12 mm ($^1/_2$ in.) in size should be provided at the highest point of and in each bulkhead section of the baseplate. These measures allow for controlled grout placement and verification that each section is filled with grout.

NOTE In general, vent holes of approximately 12 mm ($^1/_2$ in.) in diameter on 46 cm (18 in.) centers should be provided.

2.6.10 When specified, grouting pins of #6 reinforcing bar shall be provided around the perimeter of the mounting plate on 15 cm (6 in.) centers to prevent delamination between the concrete foundation and the epoxy grout. Grouting pins should be set in epoxy with a 10 cm (4 in.) minimum embedment depth before installation of grout on foundation.

NOTE Grouting pins are typically only required where the grout extends beyond the perimeter-edge of the mounting plate 450 mm (18 in.) or more.

2.6.11 When specified by the user or their designated representative, sole plates shall be nickel plated for corrosion resistance in accordance with ASTM B733-04 Type V, Service Condition SC4, Class I.

2.7 Grout Design for Auxiliary Equipment

When specified by the user or his/her designated representative, consoles and other auxiliary equipment skids shall be installed with composite grout pours as specified in 2.4.2.

2.8 Grout Design and Application of Pregrouted Baseplates

2.8.1 General

As an alternative to many of the problems associated with field grouting of ANSI/API pump, and some other general-purpose baseplates, equipment baseplates may be pre-grouted at the equipment manufacturer's facility prior to shipment. This procedure involves inverting the equipment baseplate, filling all of the baseplate bottom area with grout, and allowing the grout to cure prior to final machining of the top mounting surfaces. This method of pre-grouting offers several advantages such as:

a) grout shrinkage and resultant mounting plate distortion is mitigated by machining the equipment mounting surfaces after the grout has cured;

b) the possibility of grout voids is greatly diminished;

c) baseplate grout fill and vent holes are not required;

d) the likelihood of baseplate distortion during shipping is diminished; and

e) the equipment does not have to be removed from the baseplate to provide access to the grouting holes during final grouting in the field.

Pre-grouted baseplate designs are to be used only with epoxy grouts. The use of cementitious grouts is not permitted.

2.8.2 Pregrouted Baseplates Design and Application Requirements

2.8.2.1 Ensure that all top-side mounting holes (i.e. coupling guard mounting holes, etc.) have been properly plugged to exclude the grout. Anchorbolt tubes must also be installed to exclude grout from the anchor bolt areas with the clearances as specified in 2.6.3 as a minimum.

2.8.2.2 Ensure that the bottom of the baseplate has been properly degreased, sandblasted, etc., as would be the requirements for a conventional baseplate grout job and that the baseplate is at room temperature prior to filling with grout.

2.8.2.3 Ensure that all leveling jackscrews have been properly waxed or provided with tubes to exclude the grout during curing.

2.8.2.4 Ensure that the grout is properly mixed and placed at the correct temperature as recommended by the manufacturer.

2.8.2.5 Ensure that the grout is poured to the top-most edge of the inverted baseplate. This will prevent air voids from occurring when the baseplate is field grouted.

2.8.2.6 Do not disturb the baseplate until it has cured for at least 72 hours at the manufacturers recommended curing temperature. Final machining of the baseplate top machined surfaces shall only be completed by the baseplate manufacturer after proper grout curing.

2.8.2.7 The maximum practical size for a pre-grouted baseplate is approximately 1.5 m (4.5 ft) by 3 m (10 ft).

NOTE Limiting factors are depth of pour, support requirements, lifting capacity, machining capability, manufacturers and purchasers experience, etc.

2.8.2.8 No paint or coating is to be applied to the post-grouted baseplate as this would reduce the adhesion capability of the field secondary grout pour. Follow the grout manufacturer's instructions for surface preparation prior to the secondary field grouting.

3 Machinery Grouting Installation Requirements

3.1 Scope

Pouring of the grout under machinery is only a small part of a grout job. Much preparation is required before the grout is actually poured. These pre-grout preparations can make the difference between a grout job lasting for the life of the machinery, or only a few months or years.

This section defines the minimum recommended procedures, practices, and inspections for the installation of grouted equipment mounting plates (soleplates and baseplates). The purpose of these instructions is to provide guidelines for the installation of grouted mounting plates. In general, the instructions supplied by the grout manufacturer should be carefully followed. Any questions regarding mounting plate installation and grouting are to be referred to the user-designated representative before proceeding.

3.2 General/Special-purpose Equipment

This section is intended to address those grouting construction procedures associated with all machinery. Additional special-purpose machinery requirements are covered in the following annexes.

3.3 Grouting Precautions and Personnel Protection

During the mixing, handling, and installation of grout materials, the following minimum practices must be employed.

a) All grout material safety datasheets (MSDSs) shall be available and associated hazards reviewed with all grouting personnel.

b) Goggles or face shields and aprons should be worn by those personnel mixing and pouring the grout.

c) Protective gloves should be worn by all personnel involved in the grouting operation.

d) Dust masks or respirators (in accordance with MSDS requirements) should be worn by those personnel exposed to the grout aggregate prior to and during mixing.

e) Soap and water should be available for periodic hand cleaning, should the need arise.

f) Some epoxy grouts exhibit a very strong exothermic reaction and the possibility of thermal burns exists. Caution must be exercised in this regard.

3.4 Foundation Curing

Check foundation curing time before proceeding with preparation for grouting. The foundation shall be cured for at least seven days per ACI 301 prior to grout preparation. Epoxy grout shall never be poured on “green” or uncured concrete. Concrete must also be exposed to a drying-out period to ensure that the capillaries are free of moisture and will provide proper grout bonding.

3.5 Anchor Bolt Preparation

3.5.1 Ensure that templates, if purchased, have been used for anchor bolt locations.

3.5.2 Verify that anchor bolt sleeves are clean and dry and have been filled with a nonbonding moldable material to exclude the grout from the anchor bolt sleeve. This material will prevent water accumulation in the anchor bolt sleeves and is pliable enough to allow for small anchor bolt movement, if needed. Also ensure that anchor bolts are not tilted or bolt-bound and are perpendicular with respect to the bottom of the mounting plate.

NOTE Anchor bolt sleeves are not intended to provide sufficient movement to allow for gross misalignment of anchor bolts to their mounting plate holes. Lateral movement for alignment purposes should not exceed 6.5 mm ($^1/_4$ in.).

3.5.3 The anchor bolt threads should be covered with duct tape, foam pipe insulation, or other suitable means to keep them clean and to prevent any damage that might occur during the chipping and grouting operation.

3.5.4 All anchor bolt locations, projections, and diameters shall be field verified to match the anchor bolt hole pattern in the mounting plate prior to grouting.

3.5.5 Ensure that the anchor bolt stretch length after grouting will provide a minimum of 10 to 15 bolt diameters of stretch length.

NOTE Adequate pre-stretch length is imperative to ensure that anchor bolts do not relax and fail due to cyclic stress.

3.6 Foundation Preparation Prior to Grouting

3.6.1 A weather-protective cover may be necessary during inclement weather conditions. Wind, sun, rain, and ambient temperatures have a definite effect on the quality of a grouting installation. During hot weather, the foundation and equipment should be covered with a shelter to keep the uncured grout from being exposed to direct sunlight as well as dew, mist, or rain. In cold weather, a suitable covering to allow the foundation to be completely enclosed shall be constructed. A convective heating source should be provided so as to raise the entire foundation and equipment temperature to above 18 °C (65 °F) for at least 48 hours prior to and after grouting.

3.6.2 In the areas that will be covered by grout, the foundation shall be prepared by chipping away all laitance (poor quality concrete) and oil-soaked or damaged concrete down to exposed fractured coarse aggregate. A minimum of 25 mm (1 in.) of concrete must be removed in this chipping process down to a depth to permit 25 mm to 50 mm (1 in. to 2 in.) (minimum) of clearance between the concrete and the bottom of the mounting plate. Scarifying the surface with a needle gun or bushing tool or sandblasting to remove laitance from the foundation is unacceptable. Concrete chipping and removal must not be performed with heavy tools, such as jackhammers, as they could damage the structural integrity of the foundation. A chipping hammer with a chisel bit is the preferred tool for this purpose. 50 mm (2 in.) minimum clearance is required between the concrete surface and the bottom of the mounting plate for permanent grouting of pre-grouted baseplates.

3.6.3 Where practical, epoxy grout vertical thickness at the edge of the foundation should be equal to or greater than the distance from the foundation edge to the baseplate periphery. For machinery foundations where the grout extends to the edge of the concrete, the corners of the concrete shall be chipped to form a 50 mm (2 in.) minimum 45° chamfer (see Figure G.1). Grout forms shall be placed so as to allow proper filling of the chamfer area.

NOTE The purpose of the concrete foundation chamfer is to provide a shear plane at the grout-to-concrete interface to prevent delamination. Grouting pins may also be required as noted in 2.6.10.

3.6.4 The foundation must be kept free of contamination by oil, dirt, water, and so forth, after it has been prepared for grouting. Protective sheeting (such as sheets of clean polyethylene) shall be used to cover the prepared surfaces when work is not in progress.

3.6.5 When the surface chipping is complete, the foundation shall be thoroughly broomed and air-blown free of all dust with clean, dry, oil-free air.

3.7 Grout Forms

3.7.1 All grout forms shall be built of materials of adequate strength and securely anchored and sealed to withstand the liquid head and forces developed by the grout during placement.

3.7.2 Grout forms shall be attached to the foundation or pavement with drilled anchors. Power nailing is not permitted.

3.7.3 The inside surfaces of all grout forms shall have three coats of paste wax applied to prevent grout adherence. Oil or liquid wax is not permitted.

NOTE Waxing of the form boards must be performed prior to their placement on the concrete foundation to prevent contamination of the grout bonding surface. Three coats of paste wax is recommended.

3.7.4 Grout forms shall be properly sealed to prevent grout leakage. Grout leaks will not self-seal. Bitumastic or RTV silicone rubber can be used for this purpose.

3.7.5 Grout forms shall have 25 mm (1 in.), 45° chamfer strips at all vertical corners and at the horizontal top surface of the grout.

NOTE All chamfer edges required in the grout should be incorporated into the forms because epoxy grout cannot be easily cut or trimmed after hardening. Smoothing and cleanup of rough areas can be accomplished with a disc grinder.

3.8 Conventional Mounting Plate Design Verification (Not Pre-grouted)

3.8.1 Unless direct grouting has been specified by the users designated representative, check to ensure that all equipment is to be installed on mounting plates and that no part of the equipment is to be direct grouted.

NOTE Most all general and special-purpose equipment is installed on mounting plates and it is very rare today to see direct grouted equipment. Mounting plate installation facilitates equipment alignment and provides for easy removal of equipment for maintenance.

3.8.2 Check to ensure that all mounting plate outside corners have a minimum 50 mm (2 in.) radius to prevent cracking of the foundation grout due to stress concentration at the corners. All sharp grout contacted edges shall be broken (see Annex D, Figure D.1).

3.8.3 Check to ensure that all mounting plate anchor bolt holes have a minimum 3 mm ($^1/_8$ in.) annular clearance to allow for field alignment of mounting plates.

3.8.4 Check to ensure that all pump and other small baseplates have been provided with vertical leveling screws, as opposed to shims or wedges. Shims and wedges are not to be used.

NOTE Shims and wedges, if left in place after grouting, may cause “hard” spots that interfere with the grout’s ability to provide uniform base support. They may also allow moisture penetration and the resultant corrosion and grout spalling.

3.8.5 Check to ensure that baseplates have been provided with one 10 cm (4 in.) (minimum) grout filling hole in the center of each bulkhead section with one 12 mm ($^1/_2$ in.) vent hole near each corner of the section. This allows for controlled grout placement and verification that each section is filled with grout.

3.8.6 Check to ensure that mounting plates have sufficient grout holes and air vents in each compartment to allow for proper grouting.

NOTE In general, vent holes of approximately 12 mm ($^1/_2$ in.) in diameter on 45 cm (18 in.) centers should be provided.

3.8.7 Check to ensure that elevation adjustment nuts under the baseplate that will be grouted in and become a permanent part of the foundation have not been supplied. This allows the baseplate to be supported by the grout, not by the leveling devices.

3.8.8 Check to ensure that baseplate leveling jackscrews have been provided with stainless steel leveling pads as shown in Annex H.

3.8.9 Check to ensure that all baseplate welds are continuous and free of cracks.

3.8.10 Check to ensure that all grout pour and vent holes are accessible.

NOTE This may require removal of the equipment from its mounting plate to provide access to the grout pour holes.

3.9 Preparation of Mounting Plates (Conventional and Pregrouted)

3.9.1 Mounting Plate Preparation

3.9.1.1 Oil, grease, and dirt shall be cleaned from all grout surfaces of mounting plates. These can be removed with a solvent wipe-down. The mounting plate grout surfaces should have been prepared and ready for installation by the machinery manufacturer; if not, then they must be prepared as follows:

a) mounting plates shall be blasted to “near white metal” to remove any rust or scale unless the surface has been coated with a grout compatible coating;

b) care must be taken to avoid any damage to mounting plate machined top surfaces;

c) final cleaning shall be done with an user-approved solvent. Mineral spirits cannot be used for this purpose due to the oily residue; and

d) all "mounting plate" grout surfaces are then to be immediately coated with a "grout compatible" coating in preparation for grout placement.

NOTE 1 Epoxy primers have a limited life after application. The grout manufacturer should be consulted to ensure proper field preparation of the mounting plates for satisfactory bonding of the grout.

NOTE 2 Baseplates with interlocking structural members that have been pre-coated for grouting do not require sandblasting of the bottom of the base. Solvent cleaning is however required.

3.9.1.2 Mounting plate jackscrews shall be liberally coated with paste wax or grease to prevent grout adherence. Liquid waxes and oil are not permitted. Care must be taken to prevent thread coating from contacting the concrete foundation or metal surfaces that will be in contact with the grout.

NOTE Wax is generally preferred over grease as a thread coating from a contamination perspective.

3.9.1.3 All miscellaneous mounting plate holes (such as coupling guard holes) are to be plugged to prevent the entrance of grout. All plugs are to be coated with paste wax to prevent grout adherence.

3.9.1.4 Ensure that all equipment is isolated and in a strain-free condition with all piping, conduit, and so forth, disconnected.

NOTE The importance of equipment being grouted in a strain-free condition cannot be over emphasized. Once the equipment is "glued" into position with the grout, it is too late for mistakes.

3.9.2 Expansion Joints

3.9.2.1 Expansion joints shall be made from 25 mm (1 in.) thick closed-cell neoprene foam rubber (polystyrene may also be used) and shall be placed on 1.4 m to 2.8 m (4 ft to 6 ft) intervals in line with the anchor bolts and perpendicular with the centerline of the mounting plate and in accordance with the grout manufacturer's instructions.

NOTE 1 Neoprene is preferred because of its durability and ease to work with.

NOTE 2 Care must be exercised for installations where polystyrene expansion joints are to be removed using hydrocarbon solvents due their inherent hazards.

3.9.2.2 Expansion joints shall be "glued" into position prior to the grout pour with silicone rubber (RTV) or elastic epoxy seam sealant (liquid rubber).

3.9.2.3 Expansion joints shall not be "bridged" by a mounting plate.

NOTE The purpose of the expansion joint is to compensate for the differential thermal expansion between the concrete foundation and the epoxy grout during curing. An expansion joint bridged by a mounting plate defeats this purpose. However, for very long mounting plates. Expansion joints may be placed under bridged mounting plates to control the location of differential expansion grout cracks that are typically superficial and do not affect the integrity of the grouted foundation.

3.9.3 Soleplate Installation and Leveling

3.9.3.1 All soleplate elevations are to be set in accordance with the construction drawings. On multiple soleplate installations, one of the soleplates is chosen as the "reference" soleplate with regard to elevation. This "reference" soleplate is usually the one under the equipment requiring "process" connections.

3.9.3.2 As a minimum, soleplate level shall be set with a master level or a precision machinist's level. Levels should always be checked before beginning the plate leveling process by checking level repeatability when reversing 180 degrees.

For special-purpose equipment, unless otherwise approved by the users representative, soleplate level and elevations shall be set using a precision optical or laser level (see 3.9.3.6).

3.9.3.3 All other soleplates are then installed and leveled with respect to the reference plate. Individual soleplate elevations are to be set to a tolerance of ±63 μm (±0.0025 in.) with respect to the reference plate.

3.9.3.4 Each individual soleplate level is to be set longitudinally and transversely to within 42 micrometers per meter (0.0005 in. per ft) with no more than 130 micrometers (0.005 in.) elevation difference between any two points taken on an individual soleplate. In addition, any pair of soleplates (where more than one soleplate is used under an individual piece of equipment) shall be at the same elevation to within 130 micrometers (0.005 in.).

NOTE The intent of these requirements is to provide a mounting surface with co-planer tolerances consistent with the machined bottom surfaces of the machinery.

3.9.3.5 Soleplate level can be achieved by adjusting the jacking screws, shimming subsoleplates, or dual wedges with adjusting screws and then snugging the anchor bolt nut to hold the soleplate in place. However, elevation adjustment nuts, dual wedges, and permanent shims are not permitted under the soleplate that will be grouted in and become a permanent part of the foundation and soleplate support system.

NOTE This allows the soleplate to be supported by the grout, not by the point-loaded leveling devices.

3.9.3.6 Final elevation and level of all soleplates for critical equipment shall be set with a precision tilting level and precision scale. To balance the length of sighting distance, the tilting level is to be set near the foundation within a 6 m (20-ft) radius of all soleplates. A peg test of the instrument prior to the start of the leveling is essential (see Annex I).

3.9.3.7 All shims used in subsoleplates shall be AISI Standard Type 300 series stainless steel.

3.9.3.8 a) For equipment installations where the equipment is bolted to the soleplates prior to grouting, an initial alignment check in accordance with the alignment section of this document shall be performed to verify that coupling spacing and final alignment can be achieved without modifying the hold-down bolts or the machine feet.

3.9.3.8 b) The grouting of soleplates with special-purpose equipment attached is not permitted. Section 3.9.3.8 a) allows for a preliminary check of equipment alignment prior to its grouting, but the expectation is that the equipment will be removed prior to installing the grout. In addition to checking for post-grouting voids, removal of the equipment is also necessary in order to provide access for proper leveling of soleplates, to provide access to grouting holes, and to ensure that the weight of the equipment does not distort the soleplate during grouting. All soleplate level and elevation readings are to be re-checked after removal of the equipment.

3.9.3.9 All level readings are to be measured and recorded on datasheets. Typical datasheets for this purpose are shown in Annex C.

3.9.4 Baseplate Installation and Leveling (General-purpose Equipment and API Pumps)

3.9.4.1 All baseplate elevations shall be set in accordance with the construction drawings.

3.9.4.2 Prior to grouting, an initial alignment check in accordance with the alignment section of this document shall be performed to verify that coupling spacing and final alignment can be achieved without modifying the hold-down bolts or the machine feet.

3.9.4.3 As a minimum, baseplate level shall be set with a master level or a precision machinist's level. Levels shall always be checked before beginning the plate leveling process by checking level repeatability when reversing 180 degrees. All baseplate level measurements shall be taken on the equipment mounting surfaces. This may require removal of equipment to expose the mounting surfaces to take level readings.

3.9.4.4 General-purpose equipment and ASME pump baseplate mounting surfaces are to be leveled longitudinally and transversely to within 400 micrometers per meter (0.005 in. per ft). Refer to Annex D for baseplate leveling for horizontal centrifugal pumps.

NOTE This is the pre-grouting requirement. Some distortion may occur during grout cure. See 3.15 for post-grout cure limits.

3.9.4.5 API pump baseplate mounting surfaces are to be leveled longitudinally and transversely to within 250 micrometers per meter (0.003 in. per ft). This may require removal of equipment to access the machined mounting surfaces.

NOTE This is the pre-grouting requirement. Some distortion may occur during grout cure. See 3.15 for post-grout cure limits.

3.9.4.6 Baseplate level is achieved by adjusting the jacking screws and then snugging (tightening with minimal torque of not more than 10 % of final torque value) the anchor bolt nut to hold the baseplate in place.

3.9.4.7 All level readings are to be measured and recorded on datasheets. Typical datasheets for this purpose are shown in Annex C at the end of this section.

3.10 Direct Grouted Reciprocating Compressors

3.10.1 For direct-grouted reciprocating compressors and for those installations where the mounting plate is bolted to the bottom of the crankcase prior to grouting, alignment must be verified and recorded before pouring any grout. Of particular importance are the following alignment readings.

a) Frame level, with the mounting plate in a plane that is parallel to the main bearing bore centerline.

b) Crankshaft web deflection (ideally this should be zero). As a general rule of thumb, the web deflection should not exceed 8 micrometers per meter (0.0001 in. per in.) of piston stroke.

c) Crankshaft-to-main bearing side clearance (this provides an indication of crankshaft-to-main bearing alignment in the horizontal plane).

d) Rotor-to-stator air-gap clearance on single bearing motors (this should be equal all around the motor within a maximum variation of 10 %).

e) Coupling alignment on two-bearing motors.

f) Crosshead guides shall be level axially and transversely.

NOTE The intent of this requirement is to have cylinder flanges in a common plane and not rotated about their centerlines (i.e., good bottle to flange alignment). Refer to piping alignment section of Chapter 6.

3.10.2 The compressor frame hold-down bolts must be snugged down (with minimal torque) to hold the frame in position during grouting.

3.10.3 After the frame is leveled and aligned, it must be allowed to set for 24 hours prior to beginning the grouting. Level and frame alignment readings must be re-checked before grouting.

NOTE Direct grouting of any equipment is **STRONGLY** discouraged and should be permitted only with the specific written approval of the user or his/her designated representative.

3.11 Pregrout Meeting

3.11.1 A pre-grout meeting should be held at least one day prior to the grout pour to understand and agree on procedures, to ensure all necessary materials are on hand, and to clarify grouting responsibilities. The parties present at this meeting should include, as a minimum, the grout manufacturing technical representative, the designated machinery representative, the foreman in charge of the grouting activity, the foremen in charge of supporting the grouting activities (such as scaffolding and laborers), the grouting materials coordinator, and a site safety representative.

NOTE Typically this meeting is done for special-purpose equipment or prior to pouring the grout foundations for a group of similar equipment.

3.11.2 During the pre-grout meeting, contingency plans should be developed, such as how the job will be handled (or postponed) in the event of inclement weather.

3.11.3 During the meeting it must be made clear that once the grout pour begins, it will continue without interruption until completion.

3.11.4 A representative from the grout manufacturer is recommended if the installation personnel are not familiar with the grouting materials, forming, installation, and so forth, or if a special-purpose equipment train is being installed.

3.12 Pregrout Setup

3.12.1 Remove any dust or dirt accumulation from the grout-prepared surface with clean, dry, oil-free air.

3.12.2 Check to ensure that mounting plates are rigidly installed and that anchor bolt nuts are snug prior to grout application to ensure that they will not float out of position.

3.12.3 Prior to pouring grout, the area between the top of the anchor bolt sleeves and the bottom of the mounting plates shall be packed with a soft moldable material (such as foam pipe insulation) to exclude grout as shown in Annex F and Annex G. This is to ensure that the anchor bolt sleeves do not fill with grout and that the anchor bolts are free to move (for minor alignment correction and bolt-stretch) within the limits of their sleeves. Anchor bolt threads must also be protected with duct tape or other suitable means.

3.12.4 Check the grout form elevation to ensure that the top surface of the grout will match the elevation shown on the construction drawings. Typically, the elevation to the top of the grout extends half the thickness of the soleplate.

3.12.5 Unless otherwise specified by the users designated representative, on pump and other general-purpose equipment mounting plates, the driven equipment and the driver shall be removed from the mounting plate prior to grouting.

NOTE 1 Advantages of removing driven equipment and driver are as follows:

a) baseplates are easily leveled, using the machined mounting pads to check for levelness, without distortion of the baseplates;

b) access to grout holes for grouting is improved;

c) with baseplates that are sloped, leakage from the lowest vent hole is more easily controlled;

d) grout cleanup of equipment and driver is not required; and

e) cleanup of baseplates is easier.

NOTE 2 The removal of equipment from mounting plates may not necessarily be required for pre-grouted baseplates unless needed for access to machined surfaces for leveling. The user or his/her designated representative shall be consulted to determine if equipment is to be removed prior to grouting of pre-grouted baseplates.

3.12.6 Re-check all mounting plates for elevation and level immediately before grouting.

3.12.7 Ensure that grouting material is in clean, dry, unopened containers and has been stored at a temperature of approximately 18 °C to 29 °C (65 °F to 85 °F) for 48 hours prior to grouting. The aggregate must be absolutely dry as even the slightest amount of dampness will grossly accelerate its cure time and cause difficulties in placement.

3.12.8 Ensure that all foundation and metal surfaces are within the temperature range of 18 °C to 32 °C (65 °F to 90 °F).

3.12.9 Ensure that a sufficient quantity of grouting materials is on hand at the jobsite to complete the job (15 % to 25 % extra).

3.12.10 Ensure that clean tools, mixing equipment, and safety supplies are on hand at the jobsite.

3.12.11 Ensure that MSDS and personnel protection requirements have been reviewed with all grouting personnel.

3.13 Grout Mixing

3.13.1 No partial units of epoxy, resins, hardener, or aggregate are to be used.

3.13.2 The resin and hardener are to be mixed at 200 rpm to 250 rpm with a “jiffy mixer” (also called a dual ribbon mixer and is attached to a drill motor) per the grout manufacturer’s specified time period prior to introducing the aggregate. Do not use a paint mixer as it can create a vortex that introduces air into the mixture. There should be no entrained air in the resin/hardener mixture.

3.13.3 The blended resin and hardener are then poured into the mortar mixer and full bags of aggregate are to be slowly added and sufficiently mixed to completely wet-out the aggregate.

3.13.4 Grout shall be mixed in a clean, slow-speed (15 rpm to 20 rpm) portable mortar mixer. A concrete mixer is not permitted. Mix only long enough to completely wet the aggregate. Overmixing will introduce excessive air into the mixture and reduce the grouts strength and can also result in voids. For small pours, grout can be mixed in a clean wheelbarrow with a mortar hoe.

NOTE A mortar mixer is required to properly coat the grout aggregate with the resin and hardener without over-mixing and adding entrained air.

3.14 Mounting Plate Grouting

3.14.1 Grout the mounting plates in accordance with the grout manufacturer’s instructions.

3.14.2 To apply the grout, start at one end of the forms and fill the cavity completely while advancing toward the other end. Pour the grout along only one side of the mounting plate allowing it to slowly flow under the plate to the opposite side. Do not pour around the perimeter of the mounting plate as this will cause air entrapment. Do not vibrate the grout as a means of helping it flow as this tends to separate the aggregate from the resin binder. Limited use of push tools may be employed to help distribute the grout, using long strokes rather than short jabs. Violent ramming of the grout is not permitted.

3.14.3 The grout volume used should be checked against the estimated cavity volume. This is a good way to check for air pockets and insufficient filling.

3.14.4 Check frequently for grout leaks. Leaks will not self-seal, and if not stopped, will cause voids.

NOTE The grouting of a baseplate, either fabricated or cast, will typically require a minimum of two grouting pours. The first pour is made to the bottom of the baseplate to seal and lock the members into position for the secondary pour. After the grout has cured,

a second, or perhaps third pour, may be required to completely fill the baseplate depending upon the manufactures instructions for maximum pour thickness. Attempting to make a baseplate grout pour in one step will most likely result in leaks and voids under the baseplate.

3.14.5 If specified for special-purpose equipment, a grout sample shall be obtained for each batch mixture (polystyrene cupfull) for compressive strength testing. All samples are to be labeled and their batch placement location noted.

NOTE The purpose of these samples is to enable testing and evaluation of the "as-poured" grout mixture.

3.14.6 A final check of soleplate elevation and level shall be made before the grout sets.

3.14.7 Air bubbles rising to the surface of epoxy grout may be removed by lightly spraying the bubble surface with the grout manufacturer's cleaning solvent.

3.14.8 If required, the exposed surface of the grout can be troweled or broomed when it is in a tacky state to provide a non-skid surface. Troweling and brooming may be facilitated by the use of grout solvent. Troweling and brooming shall be carried out in a manner that precludes excessive blending of the grout solvent into the surface of the grout.

3.14.9 Remove any grout head boxes after the grout has set sufficiently. Do not plug any baseplate fill and vent holes until the grout has set (this can cause base distortion due to grout expansion).

3.15 Post-grouting Instructions

3.15.1 Typically, three days after the grout has been poured (or less, depending on ambient temperature), the grout should be of sufficient hardness to remove jackscrews and grout forms. This will ensure that the grout has obtained most of its strength and hardness.

NOTE The grout is of sufficient hardness if a six-penny finishing nail cannot be driven into the grout surface.

3.15.2 a) For general-purpose equipment and ASME pumps, the post-grout cure level criteria is a maximum of 0.008 in. per ft (both longitudinally and transversely). Mounting plates that settle unevenly and/or beyond the specified level tolerance shall be corrected. Correction of level may include removal and regrouting or field machining of the equipment mounting surfaces.

3.15.2 b) For API pumps, the post-grout cure level criteria is less than 0.005 in. per ft (both longitudinally and transversely). Mounting plates that settle unevenly and/or beyond the specified level tolerance shall be corrected. Correction of level may include removal and regrouting or field machining of the equipment mounting surfaces.

3.15.3 Mounting plate jackscrew holes shall be filled with a flexible sealant material (not grout) such as room temperature vulcanizable (RTV) silicone rubber or with short cap screws that do not extend below the threaded holes in the mounting plate.

3.15.4 Check grout for softness. This can be done by placing a magnetic-based dial indicator on the mounting plate (referenced to the concrete foundation) and checking for any movement as each anchor bolt is loosened and retightened. Soleplate movement should not exceed 25 micrometers (0.001 in.).

3.15.5 After the grout has cured, expansion joints shall be sealed with elastic epoxy seam sealant (liquid rubber) or silicone rubber (RTV).

3.15.6 The entire top of the machinery foundation shall then be painted with a grout-compatible nonskid protective coating to protect the foundation cap from oil and weathering. This coating shall extend down from the top of the foundation at least 45 cm (18 in.) if possible.

3.15.7 Lubricate all anchor bolt threads liberally with mineral oil and torque anchor bolts in accordance with the equipment manufacturer's recommendations. Table B.1 may be used as a guide if manufacturer information is not available.

NOTE Table B.1 is based on threads lubricated with mineral oil and will provide a bolt stress of 30,000 psi. This table is NOT applicable if anti-seize thread lubricants are used.

3.15.8 All anchor bolts shall have full penetration of the anchor bolt nut and at least 2 1/2 threads protruding above the anchor bolt nut.

3.16 Filling Grout Voids

3.16.1 After the grout has cured, check for voids by tapping along the top deck of the mounting plate. Mark the void areas to allow for proper identification when filling. A solid thud indicates a good grout area while a drumlike hollow sound indicates a void requiring filling.

NOTE Grout voids should not be expected as being "normal." Voids are the result of an inadequate mounting plate design or improper placement of the grout.

3.16.2 Void areas are to be filled by drilling NPT 1/8 holes in opposite corners of each void area. One hole in each void is to be tapped for installation of a NPT 1/8 grease fitting; the other holes serve as vents. Grout is then pumped into each void with a grout gun until the grout emerges from the vent holes.

NOTE A "new," unused, and unpainted grease gun can be used as a grout gun. The grease gun must be completely disassembled and cleaned with the grout manufacturer's approved solvent. Complete immersion of the gun into the solvent is required to ensure proper cleaning.

3.16.3 Care must be exercised in filling voids as high pressures created from the grout gun can lift or distort the baseplate. It is therefore extremely important that the grout and vent holes are in communication with each other. An air squeeze bottle may be used to test for communication by blowing air into the grout hole and noting its exit at the vent hole (do not use high-pressure air). A dial indicator supported from a main beam shall also be used to monitor baseplate movement during void filling. Remove all grease fittings when finished.

3.16.4 Clean up any spilled grout with the grout manufacturer's approved solvent.

3.16.5 After the void grout has cured, re-check the baseplate to ensure that all voids are filled with grout. If void areas still exist, repeat the drilling and pumping procedures as necessary.

Annex A
(normative)

Grouting Checklists

Section	Requirements	Name	Date
2.8	**Pre-grouted Baseplates**		
2.8.2.1	Ensure that all top-side mounting holes (i.e. coupling guard mounting holes, etc.) have been properly plugged to exclude the grout. Anchorbolt tubes must also be installed to exclude grout from the anchor bolt areas with the clearances as specified in 2.6.3 as a minimum.		
2.8.2.2	Ensure that the bottom of the baseplate has been properly degreased, sandblasted, etc., as would be the requirements for a conventional baseplate grout job.		
2.8.2.3	Ensure that all leveling jackscrews have been properly waxed or provided with tubes to exclude the grout during curing.		
2.8.2.4	Ensure that the grout is properly mixed and placed at the correct temperature as recommended by the manufacturer.		
2.8.2.5	Ensure that the grout is poured to the top-most-edge of the baseplate. This will prevent air voids from occurring when the baseplate is field grouted.		
2.8.2.6	Do not disturb the baseplate until it has cured for at least 72 hours at the manufacturers recommended curing temperature. Final machining of the baseplate top machined surfaces shall only be completed after proper grout curing.		
2.8.2.7	The maximum practical size for a pre-grouted baseplate is approximately 1 m (3 ft) by 3 m (10 ft). NOTE Limiting factors are depth of pour, support requirements, lifting capacity, machining capability, etc.		
2.8.2.8	No paint or other coating applied to post-grouted baseplate.		
3.4	**Foundation Curing**		
3.4	The foundation shall be cured for at least seven days per ACI 301 prior to grout preparation.		
3.5	**Anchorbolt Preparation**		
3.5.1	Templates (if purchased) have been used for anchor bolt locations.		
3.5.2 a)	Anchor bolt sleeves are clean and dry and filled with a nonbonding moldable material.		
3.5.2 b)	Anchor bolts are not tilted or bolt bound and are perpendicular with respect to the bottom of the mounting plate.		
3.5.3	Anchor bolt threads are undamaged and have been protected with duct tape or other suitable means.		
3.5.4	All anchor bolt locations and projections have been verified.		
3.5.5	Ensure that anchor bolt stretch length after grouting will provide 10 to 15 bolt diameters of stretch length.		
3.6	**Foundation Preparation**		
3.6.1	An adequate weather protective structure has been constructed over the areas to be grouted.		
3.6.2 a)	Concrete foundation is roughened up and all laitance removed down to cracked exposed aggregate for a good grout bond.		

Section	Requirements	Name	Date
3.6.2 b)	The minimum grout thickness under any portion of the baseplate/soleplate will be 25 mm to 50 mm (1 in. to 2 in.).		
3.6.2 c)	Foundation is free of structural cracks.		
3.6.3 a)	Epoxy grout vertical thickness at the edge of the foundation should be equal to or greater than the distance from the foundation edge to the mounting plate periphery.		
3.6.3 b)	All grout forms have been provided with 25 mm (1 in.) 45° chamfer strips at vertical corners and horizontal edges.		
3.6.3 c)	All grout forms must be placed so as to allow proper filling of the chamfer area.		
3.6.4	All concrete grouted areas must be kept clean and free of oil, dirt and moisture.		
3.7	**Grout Forms**		
3.7.1	Grout forms are of adequate strength to support the grout.		
3.7.2	Power-nailing of grout forms to concrete foundation is not permitted.		
3.7.3	The inside surfaces of all grout forms shall have three coats of paste wax to prevent grout adherence.		
3.7.4	Grout forms have been sealed to the foundation to prevent leaks.		
3.7.5	Grout forms have 25 mm (1 in.), 45° chamber strips at all vertical corners and at the horizontal surface of the grout.		
3.8	**Mounting Plate Design Verification (Not Pre-grouted)**		
3.8.1	Unless direct grouting has been specified by the users designated representative, ensure that all equipment is to be installed on mounting plates and that no part of the equipment is to be direct grouted.		
3.8.2	Mounting plates have 50 mm (2 in.) minimum radiused corners.		
3.8.3	Anchor bolts have 3 mm ($^1/_8$ in.) annular clearance in mounting plate holes.		
3.8.4	All pump and other small mounting plates have been provided with vertical leveling screws. Shims and wedges are not to be used.		
3.8.5	Mounting plates have been provided with one 10 cm (4 in.) minimum grout filling hole in the center of each bulkhead section and one 12 mm ($^1/_2$ in.) vent hole.		
3.8.6	Mounting plates have sufficient grout and air vent holes in each compartment to allow for proper grouting.		
3.8.7	Elevation adjustment nuts will not be permanently grouted.		
3.8.8	Mounting plate leveling jackscrews have been provided with stainless steel leveling pads.		
3.8.9	Ensure that all baseplate welds are continous and free of cracks.		
3.8.10	All grout pour and vent holes are accessible.		
3.9	**Preparation of Mounting Plates (Conventional and Pre-grouted)**		
3.9.1	**Conventional Mounting Plate Preparation**		
3.9.1.1 a)	Mounting plate has been blasted and all grouting surfaces prepared in accordance with the grout manufacturer's recommendations.		
3.9.1.1 b)	Care taken to avoid any damage to mounting plate machined top surfaces.		
3.9.1.1 c)	Final cleaning shall be done with a user approved solvent.		

Section	Requirements	Name	Date
3.9.1.1 d)	All mounting plate grout surfaces are coated with a grout compatible coating in preparation for grout placement.		
3.9.1.2 a)	Mounting plate jackscrews are liberally coated with paste wax or grease to prevent grout adherence. Liquid waxes and oil are not permitted.		
3.9.1.2 b)	No thread coating is in contact with any surfaces to be grouted.		
3.9.1.3	All miscellaneous mounting plate holes (i.e. coupling guard holes) are plugged to exclude grout and waxed to prevent grout adherence.		
3.9.1.4	Equipment to be grouted is isolated and in a strain-free condition with all piping, conduit, and so forth, disconnected.		
3.9.2	**Expansion Joints**		
3.9.2.1	Expansion joints provided are of closed cell neoprene foam rubber material and placed on 1.4 m to 2.8 m (4 ft to 6 ft) intervals.		
3.9.2.2	Expansion joints are fixed into position with RTV or liquid rubber so that they will not move when the grout is poured.		
3.9.2.3	Expansion joints are not bridged by a mounting plate.		
3.9.3	**Soleplate Installation and Leveling**		
3.9.3.1	Soleplate elevations are set in accordance with the construction drawings.		
3.9.3.2	Soleplate level is to be set with a master level or a precision machinist's level as a minimum. For special-purpose equipment, a precision optical or laser level is required.		
3.9.3.3	On multiple soleplate installations, individual soleplate elevations are set to within ±63 micrometers (±0.0025 in.) with respect to the reference soleplate.		
3.9.3.4	Each soleplate is set longitudinally and transversely to within 42 micrometers per meter (0.0005 in. per ft) with no more than 130 micrometers (0.005 in.) elevation difference between any two points taken on an individual soleplate.		
3.9.3.4	Any pair of soleplates, where more than one soleplate is used under an individual piece of equipment, shall be at the same elevation to within 130 micrometers (0.005 in.).		
3.9.3.5	Elevation adjustment nuts, dual wedges, and permanent shims are not permitted to be grouted in place.		
3.9.3.6	Final elevation and level for critical equipment is to be set with a precision optical level as a minimum after the performance of a peg Test (see Annex I).		
3.9.3.7	All shims used in sub-soleplates are AISI Standard Series 300 stainless steel.		
3.9.3.8 a)	A preliminary alignment check with the equipment bolted to the soleplates has been performed to ensure that proper alignment can be achieved without modifying the hold-down bolt or the machine feet.		
3.9.3.8 b)	After the pre-alignment check has been made, the equipment has been removed from the soleplates and elevation and level of all soleplates has been re-checked.		
3.9.3.9	All machined baseplate or soleplate surfaces are level in accordance with the specification, and signed-off datasheets for level record have been completed.		
3.9.4	**Baseplate Installation and Leveling (of General-purpose Equipment and API Pumps)**		
3.9.4.1	All baseplate elevations set in accordance with the construction drawings.		

Section	Requirements	Name	Date
3.9.4.2	Prior to alignment, an initial alignment check is made to verify that coupling spacing and final alignment can be achieved without modifying the hold-down bolt or equipment feet.		
3.9.4.3	As a minimum, baseplate level shall be set with a master level or a precision machinists level. Repeatability of level readings must be checked by reversing the level 180°. All baseplate readings must be taken on the equipment mounting surfaces.		
3.9.4.4	General-purpose equipment and ASME pumps baseplate mounting surfaces are to be leveled to within 420 micrometers per meter (0.005 in. per ft).		
3.9.4.5	API pump baseplate mounting surfaces are to be leveled longitudinally and transversely to within 250 micrometers per meter (0.003 in. per ft).		
3.9.4.6	Anchor bolts torqued to maximum of 10 % of final torque.		
3.9.4.7	All level and elevation readings are to be measured and recorded on datasheets. Typical datasheets for this purpose are shown in Annex C.		
3.10	**Direct Grouted Reciprocating Compressors**		
3.10.1 a)	Frame level with the mounting plate in a plane that is parallel to the main bearing bore center line in accordance with manufacturer requirements.		
3.10.1 b)	Crankshaft web deflection should not exceed the lesser of 8 micrometers per meter (0.0001 in. per in.) of piston stroke or the manufacturer's requirements.		
3.10.1 c)	Crankshaft-to-main bearing side clearance in accordance with manufacturer's requirements		
3.10.1 d)	Rotor-to-air-gap clearance on single bearing motors maximization variation of 10 %.		
3.10.1 e)	Coupling alignment on two-bearing motors per Chapter 7 of API 686.		
3.10.1 f)	Crosshead guides shall be level axially and transverse in accordance with manufacturer's requirements.		
3.12	**Pre-grout Setup**		
3.12.1	All surfaces in contact with the grout are clean, dry, and oil-free.		
3.12.2	Mounting plates are rigidly installed and anchor bolts have been snugged into position to prevent movement during grouting.		
3.12.3	Anchor bolt sleeves have been filled with a soft moldable material to exclude grout contact and allow for slight movement.		
3.12.4	Grout forms and mounting plate elevations agree with the construction drawings.		
3.12.5	Unless otherwise specified by the user or his/her designated representative or in the case of pre-grouted mounting plates, all equipment has been removed from the mounting plates.		
3.12.6	Re-check all mounting plates for elevation and level immediately before pouring the grout.		
3.12.7	Grouting materials are in clean, dry, unopened containers and have been stored at a temperature of approximately 21 °C (75 °F) for 48 hours before grouting.		
3.12.8	All foundation and metal surfaces are within the temperature range of 18 °C to 32 °C (65 °F to 90 °F).		
3.12.9	Sufficient quantity of grouting materials are on hand at the jobsite to complete the job (15 % to 25 % extra).		
3.12.10	Clean tools, mixing equipment, and safety supplies are on hand at the jobsite.		

Section	Requirements	Name	Date
3.12.11	MSDSs and personnel protection requirements have been reviewed with all grouting personnel.		
3.13	**Grout Mixing**		
3.13.1	No partial units of epoxy resin, hardener, or aggregate are to be used.		
3.13.2	Resin and hardener are mixed at 200 rpm to 250 rpm for the specified time and no air entrainment is indicated.		
3.13.3	Full bags of aggregate are slowly added to blended resin/hardener liquid and mixed to completely wet-out the aggregate.		
3.13.4	Grout is mixed in a clean, slow-speed (15 rpm to 20 rpm) portable mortar mixer (or in a wheelbarrow for small pours).		
3.14	**Mounting Plate Grouting**		
3.14.1	Grout is placed within its pot life. Time at beginning of pour: _____(AM) (PM). Time at end of pour: _____(AM) (PM).		
3.14.2	Grout is poured from one side of the mounting plate allowing air to escape and prevent voids. A vibrator is not to be used as this has the potential to separate the aggregate from the resin.		
3.14.3	The grout volume used agrees with the estimated cavity volume.		
3.14.4	No grout leaks are observed that could result in voids.		
3.14.5	For special-purpose equipment, a grout sample is obtained for each batch mixture (polystyrene cup full) for compressive strength testing. All samples are to be labeled and their batch placement location noted.		
3.14.16	A final check of mounting plate elevation and level is to be made immediately after pouring the grout and before it has had time to harden.		
3.14.17	All grout surface bubbles are removed by lightly spraying a grout manufacturers approved solvent.		
3.14.18	If required, the exposed surface of the grout shall be troweled or broomed when it is in its tacky state to provide a non-skid surface.		
3.14.19	Remove any grout “head boxes” after the grout has set sufficiently. Do not plug any baseplate fill and vent holes until the grout has hardened.		
3.15	**Post-grouting Instructions**		
3.15.1	Grout is of sufficient hardness to remove the forms.		
3.15.2	Mounting plate level and elevation must be checked to ensure that they are in tolerance. Correction may require removal and regrouting.		
3.15.3	Mounting plate jack-screws are to be removed and filled with a flexible seam sealant such as RTV or liquid rubber (NOT GROUT).		
3.15.4	Grout is checked for “softness” with a dial indicator. Baseplate/soleplate checked for soft-foot at each anchor bolt location with a magnetic base dial indicator as anchor bolts are torqued. Base movement does not exceed 0.02 mm (0.001 in.).		
3.15.5	Expansion joints are sealed with elastic epoxy seam sealant or silicone rubber (RTV).		
3.5.16	Top of machinery foundation painted with a grout-compatible nonskid protective coating (not machined mounting surfaces).		

Section	Requirements	Name	Date
3.15.7	Lubricate all anchor bolt threads liberally with mineral oil and torque anchor bolts in accordance with the manufacturers recommendation. NOTE Do not use anti-seize compounds for this lubricant. Table A.1 may used as a guideline in the absence manufacturer information. Anchor Bolt Size:_____ Anchor Bolt Torque Specification: _____ Installed Torque: _____		
3.15.8	All anchor bolts have full penetration of the anchor bolt nut and 2 1/2 threads protruding above the anchor bolt nut.		
3.16	**Filling Grout Voids**		
3.16.1	Baseplate "sounded" for voids and all voids repaired. Indicate number of voids found, their size, and their location: _____.		
3.16.2	Void areas have NPT 1/8 holes installed in opposite corners of void with grease fitting installed in one of the holes.		
3.16.3	Grout void fill and vent holes are in "communication." Dial indicator used on mounting plate to monitor plate movement while filling grout void.		
3.16.4	Clean up any spilled grout with the grout manufacturer's approved solvent.		
3.16.5	Re-check baseplate after grout has cured to ensure that all voids are filled with grout. If voids still exist, repeat the drilling and pumping procedure as necessary.		

EQUIPMENT IDENTIFICATION NUMBER _____

GROUTING INSPECTOR _____ DATE _____

Annex B
(informative)

Anchor Bolt Torque Tables

Table B.1—30,000 psi Internal Bolt Stress

Nominal Bolt Diameter (in.)	**Number of Threads** (per in.)	**Torque** (ft-lb)	**Compression** (lb)
$^1/_2$	13	30	3780
$^5/_8$	11	60	6600
$^3/_4$	10	100	9060
$^7/_8$	9	160	12,570
1.0	8	245	16,530
1 $^1/_8$	8	355	21,840
1 $^1/_4$	8	500	27,870
1 $^1/_2$	8	800	42,150
1 $^3/_4$	8	1500	59,400
2.0	8	2200	79,560
2 $^1/_4$	8	3180	102,690
2 $^1/_2$	8	4400	128,760
2 $^3/_4$	8	5920	157,770
3.0	8	7720	189,720

NOTE 1 All torque values are based on anchor bolts with threads well-lubricated with oil (NOT anti-seize compound). The use of anti-seize compounds will reduce these torque values.

NOTE 2 In all cases the elongation of the bolt will indicate the load on the bolt.

Table B.2—2110 kg/cm^2 Internal Bolt Stress

Nominal of Bolt Diameter (mm)	**Torque** Newton-Meters	**Compression** (lb)
M12	31	1778
M16	110	3311
M24	363	7447
M30	1157	18,247
M52	3815	37,136

NOTE 1 All torque values are based on anchor bolts with threads well-lubricated with oil (NOT anti-seize compound). The use of anti-seize compounds will reduce these torque values.

NOTE 2 In all cases the elongation of the bolt will indicate the load on the bolt.

Annex C
(informative)

Leveling Datasheet and Drawings

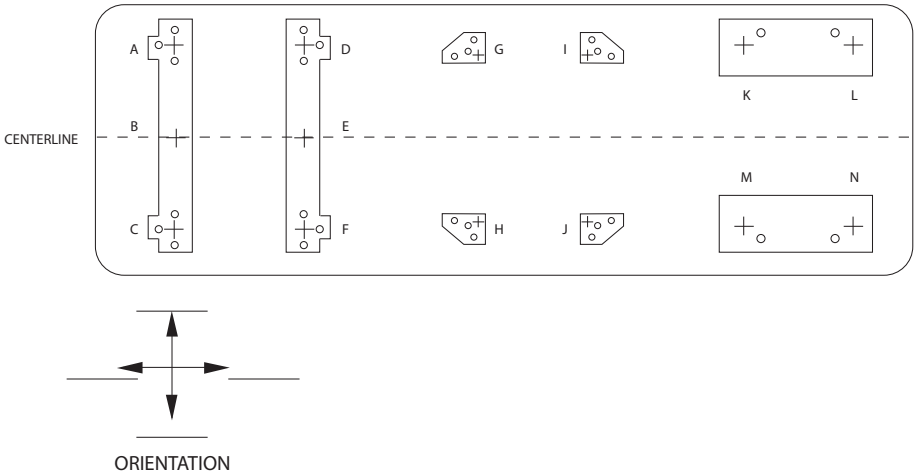

Figure C.1—Typical Mounting Plate Layout for Elevation and Level Measurement

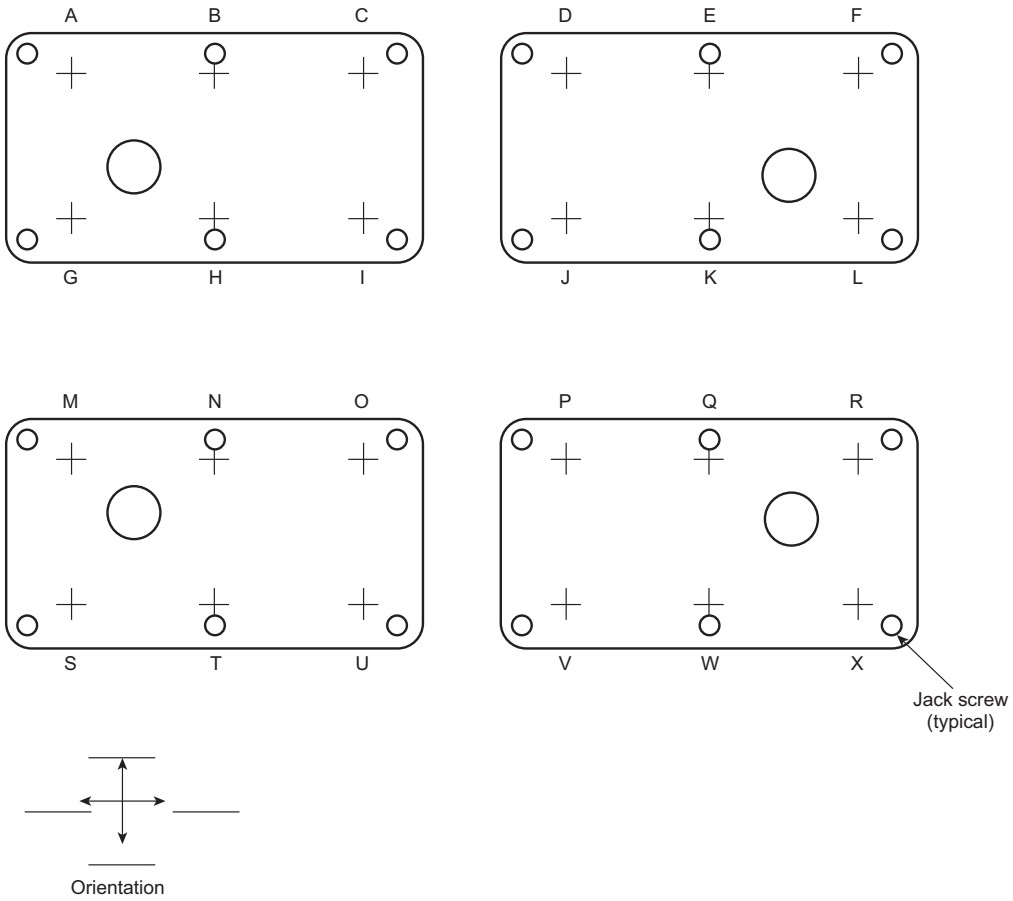

Figure C.2—Typical Soleplate Layout for Elevation and Level Measurement

Typical Mounting Plate Level Datasheet
(Sheet 1 of 1)

Elevation Specified on Civil Drawing _____

Elevation of Soleplate at Location "A" _____

Civil Drawing Reference No. _____

Location	Elevation Referenced to Location "A"	Comments
B	_____	
C	_____	
D	_____	
E	_____	
F	_____	
G	_____	
H	_____	
I	_____	
J	_____	
K	_____	
L	_____	
M	_____	
N	_____	

CHECK BY _____ CONTRACTOR DATE _____

APPROVED BY _____ (USER) DATE _____

Annex D
(informative)

Typical Mounting Plate Arrangement for Baseplate Mounted Special-purpose Equipment

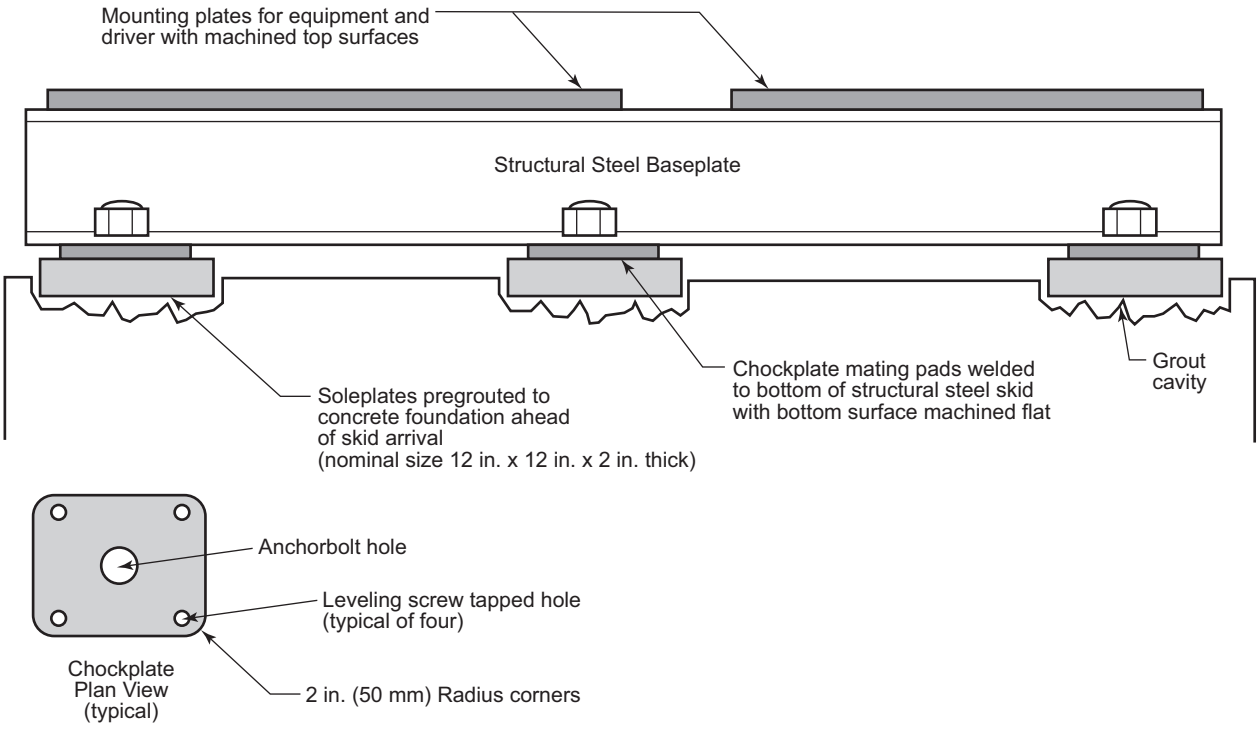

Figure D.1—Typical Mounting Plate Arrangement for Baseplate Mounted Special-purpose Equipment

Annex E
(informative)

Baseplate Leveling for Horizontal Centrifugal Pumps (for Use When a Pump and/or its Driver are Not Removed from the Baseplate for Grouting)

Procedure

1) Determine high end of baseplate. Then, start leveling across pads on high end by adjusting leveling bolts adjacent to the pad that is being leveled. For example, when leveling driver pads A and B in crosswise direction, level at anchor points 1 and 2 (see Figure E.1) with level positioned as shown by Figure E.3. Continue leveling until baseplate is level in crosswise direction at places illustrated by Figure E.2 and Figure E.3—pads A and B must be level across middles and across ends, particularly those ends nearest pump.

   NOTE Use only equipment mounting pads for determining level. *Never* use nozzles or baseplate rails.

2) Level both sides of baseplate in lengthwise direction by adjusting leveling bolts adjacent to pad that you are leveling. For example, when leveling pad A, level at anchor points 1, 3, and 5, Figure E.1, with level positioned as shown by Figure E.4. Continue leveling until both sides of baseplate (that is, pads A, B, and each side of pump) are level in lengthwise direction at places illustrated by Figure E.4 and Figure E.5.

3) Tighten foundation anchor bolts and pump feet hold-down bolts. As you tighten bolts, position level as illustrated in the four leveling figures and check leveling in both crosswise and lengthwise directions. If tightening bolts disturbs leveling, adjust leveling bolts until baseplate is level in both directions at place where leveling was disturbed. Again tighten bolts and verify leveling in both directions. Continue this procedure until all bolts lengthwise and crosswise directions are tight.

   NOTE Grouting of baseplates (mounting plates) without removal of equipment is allowed only when specifically permitted by the user or his/her designated representative (exception is noted for pre-grouted baseplate designs that have sufficient area to place leveling devices).

Figure E.1 through Figure E.5—Single Stage Overhung Pump

Figure E.6 through Figure E.10—Between Bearing Single or Multistage Pump

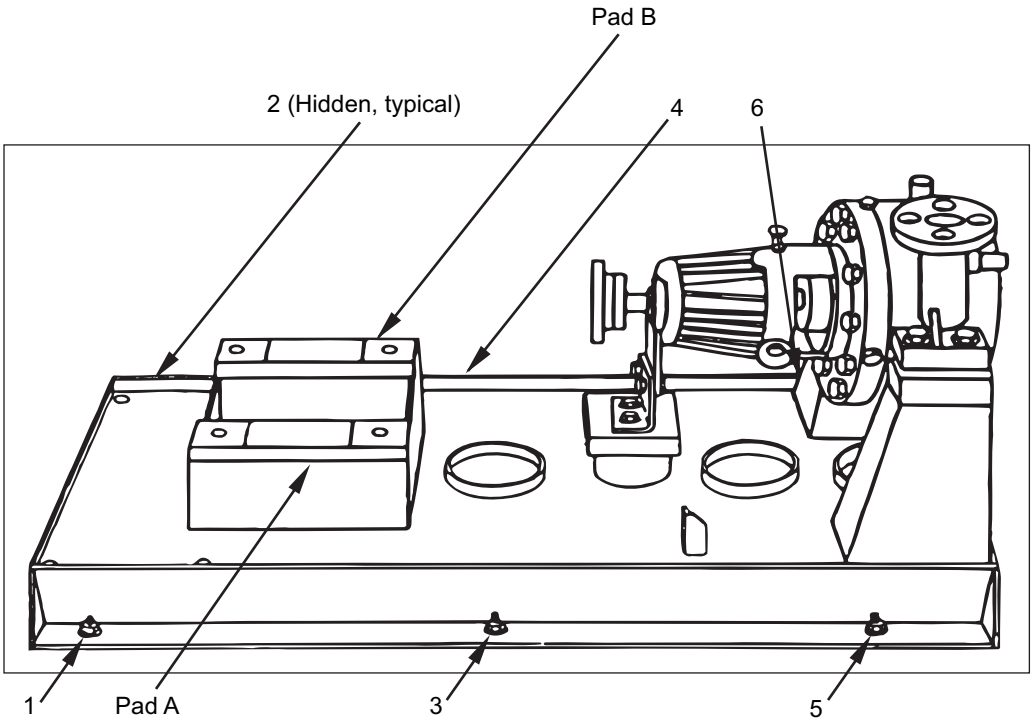

NOTE Points 2, 4, and 6 are directly across from points 1,3, and 5, respectively.

Figure E.1—Baseplate Top View

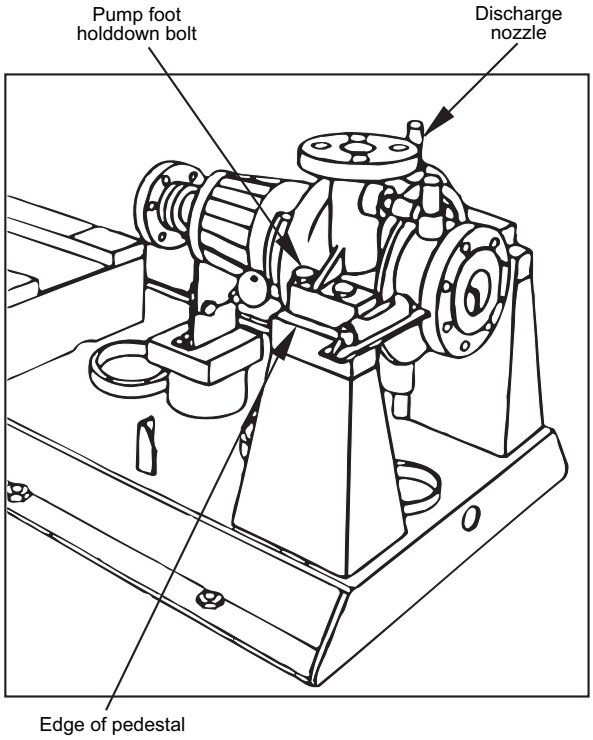

Figure E.2—Leveling Pump End Crosswise

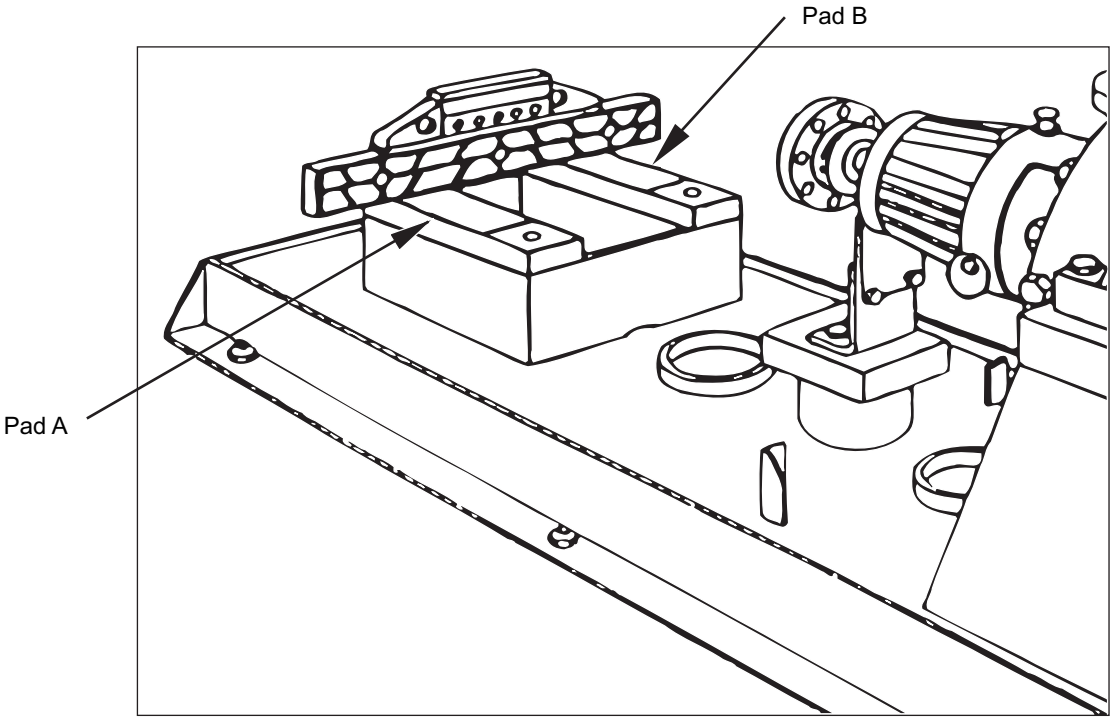

Figure E.3—Leveling Driver End Crosswise

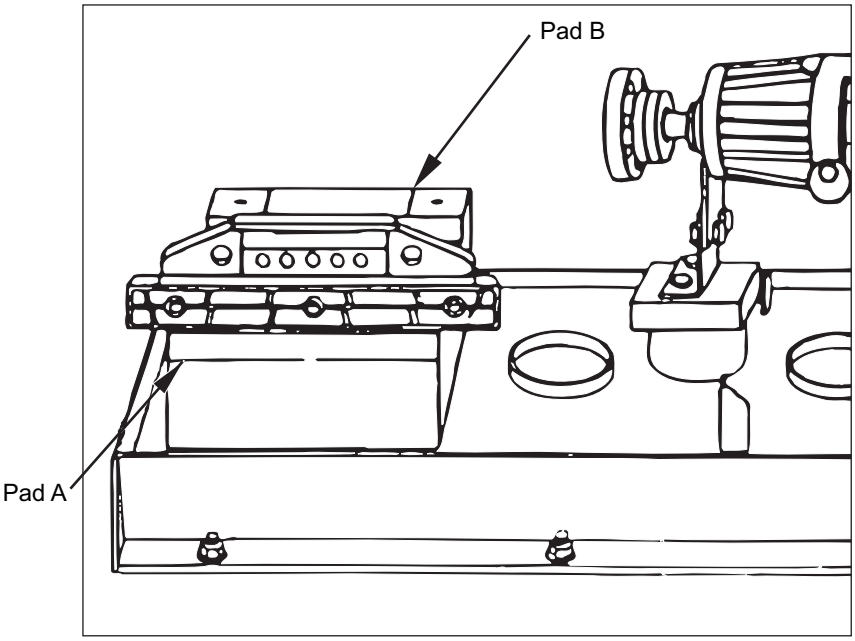

Figure E.4—Leveling Driver End Lengthwise

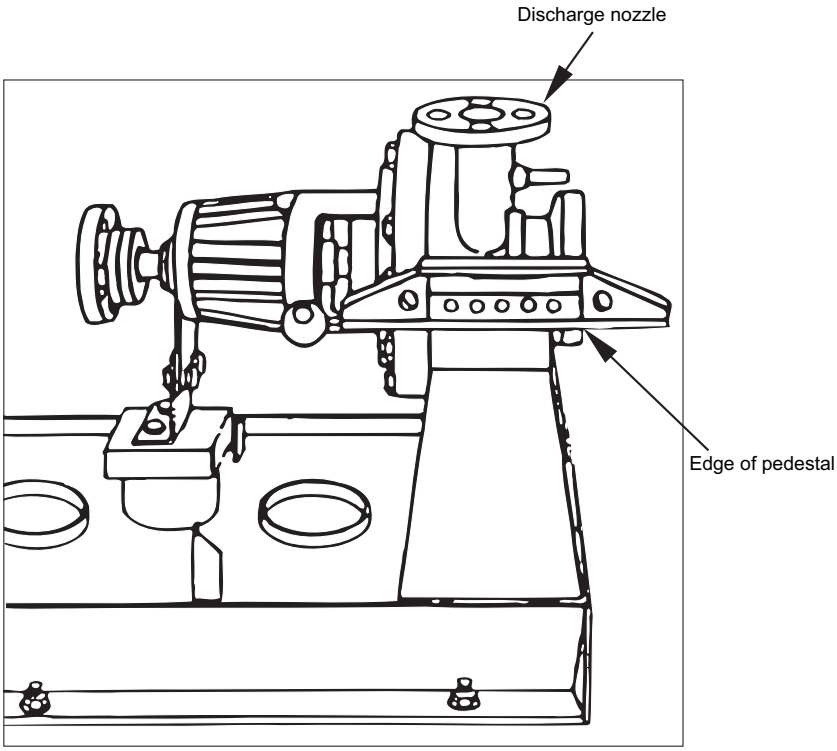

Figure E.5—Leveling Pump End Lengthwise

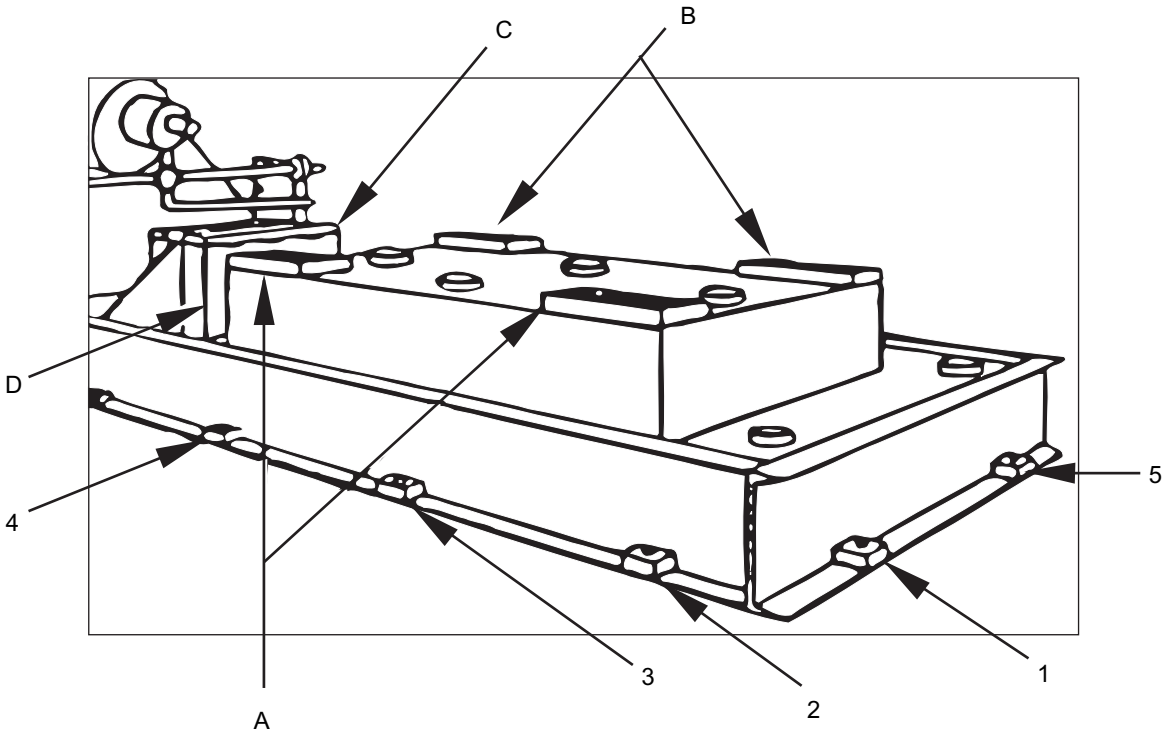

Figure E.6—Baseplate Top View (Typical)

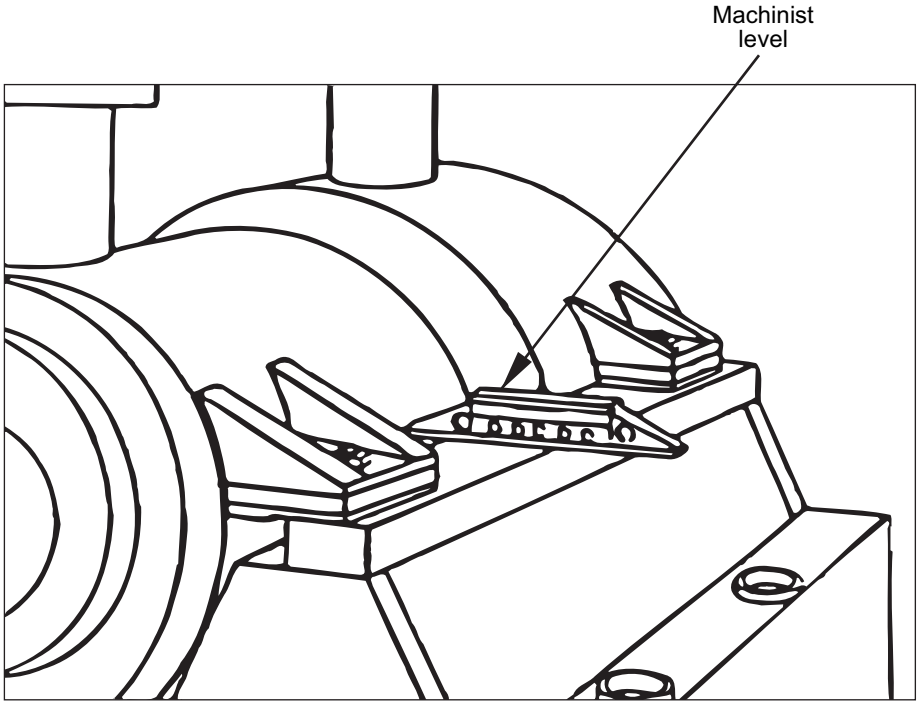

Figure E.7—Leveling Pump End Crosswise

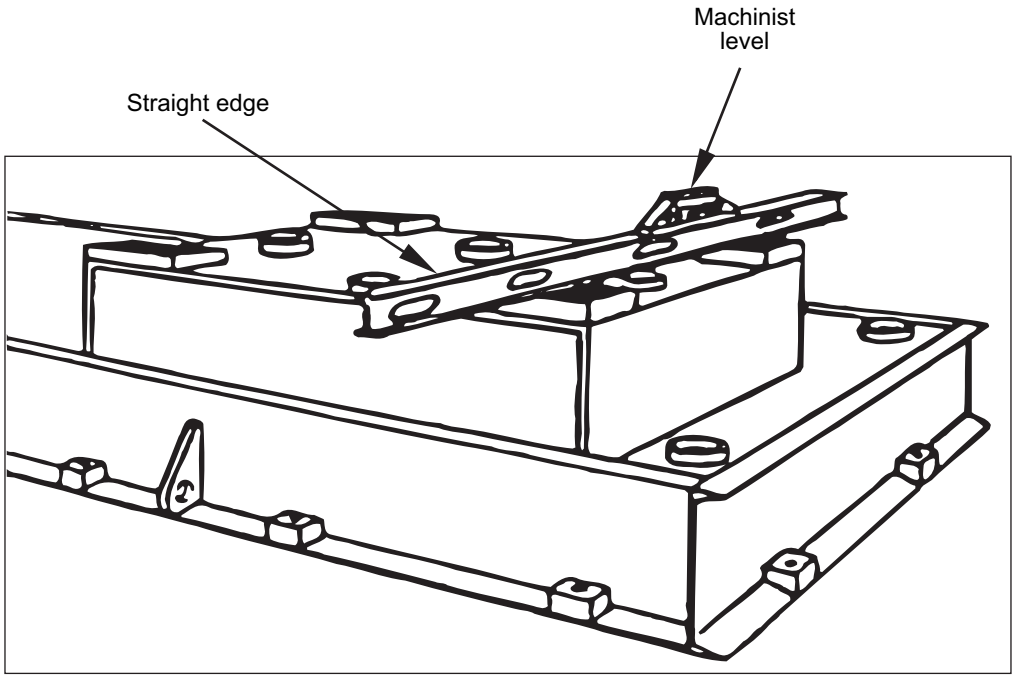

Figure E.8—Leveling Driver End Crosswise (Typical)

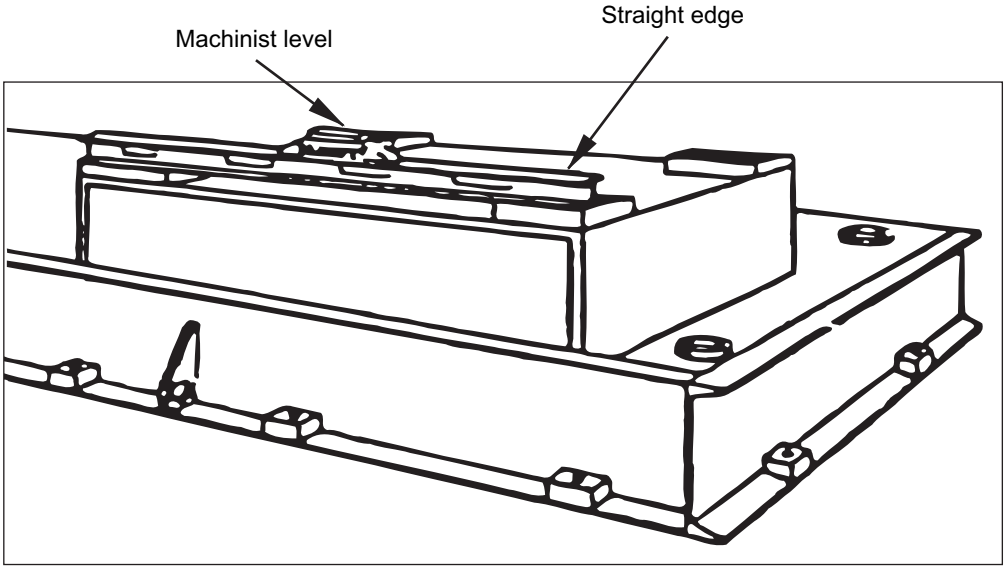

Figure E.9—Leveling Driver End Lengthwise (Typical)

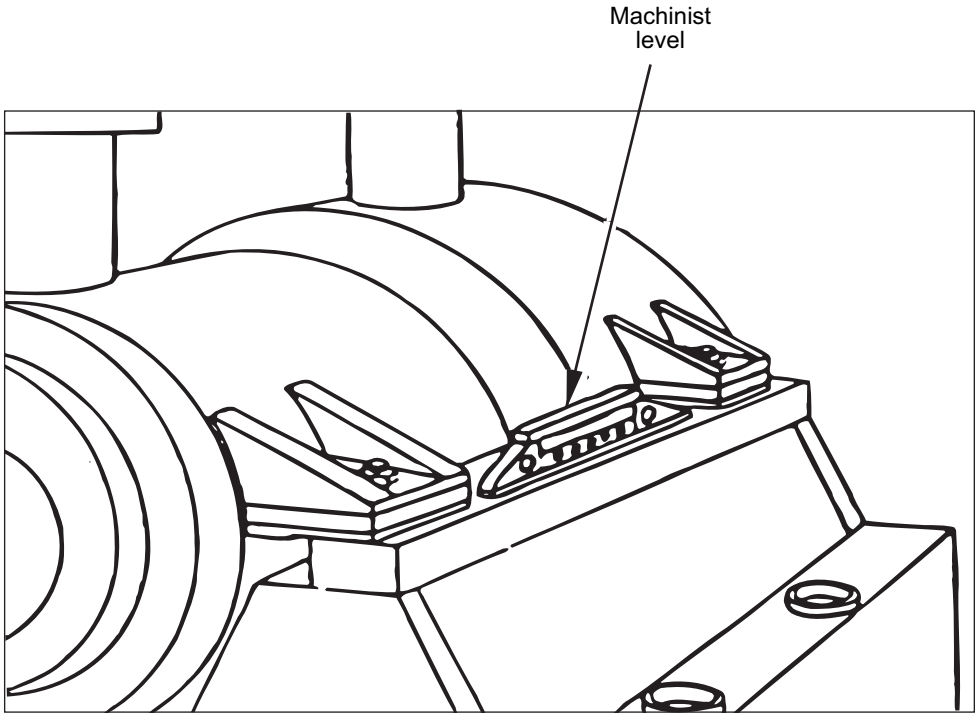

Figure E.10—Leveling Pump End Lengthwise

Annex F
(informative)

Typical Grouting Installation of Soleplates

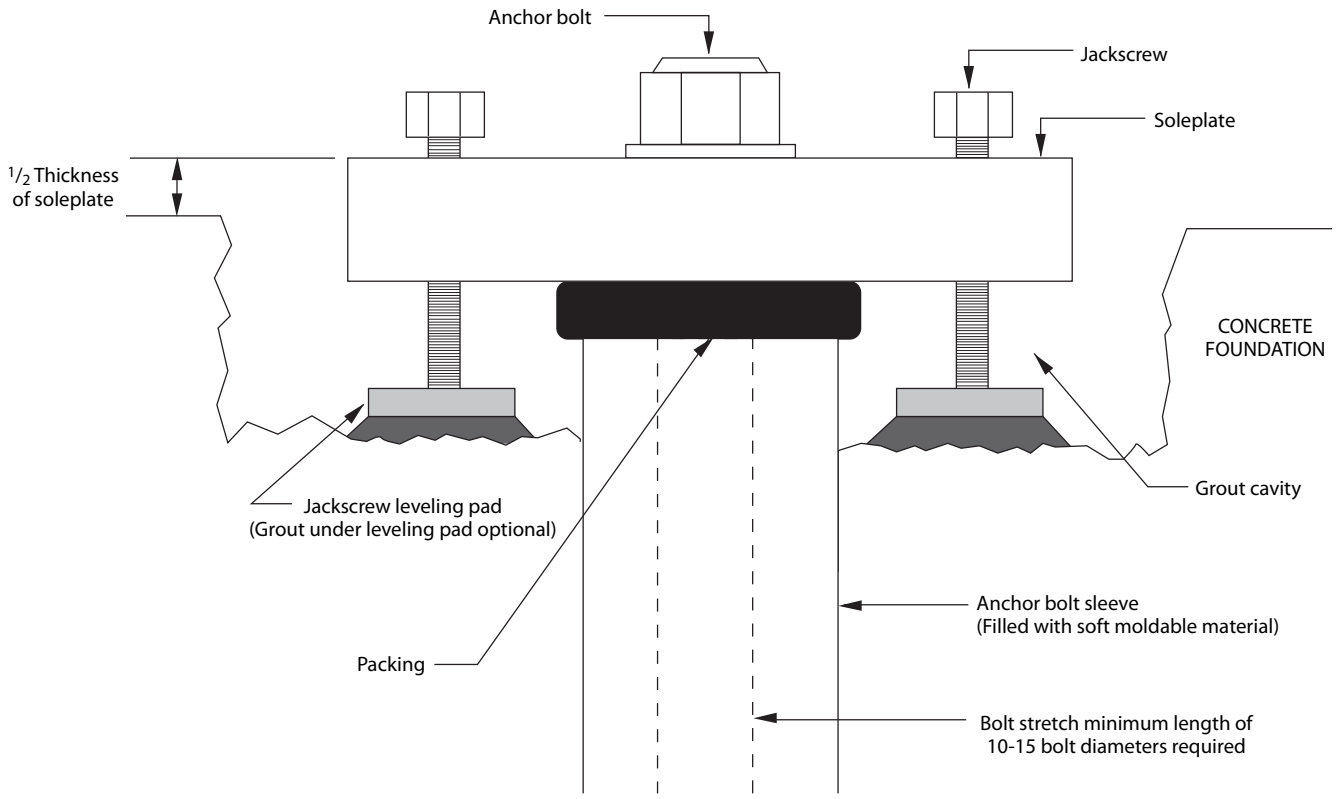

For Special Purpose Equipment

Figure F.1—Typical Grouting Installation of Soleplates

Annex G
(informative)

Typical Grouting of Baseplates for Pumps and Special-purpose Equipment

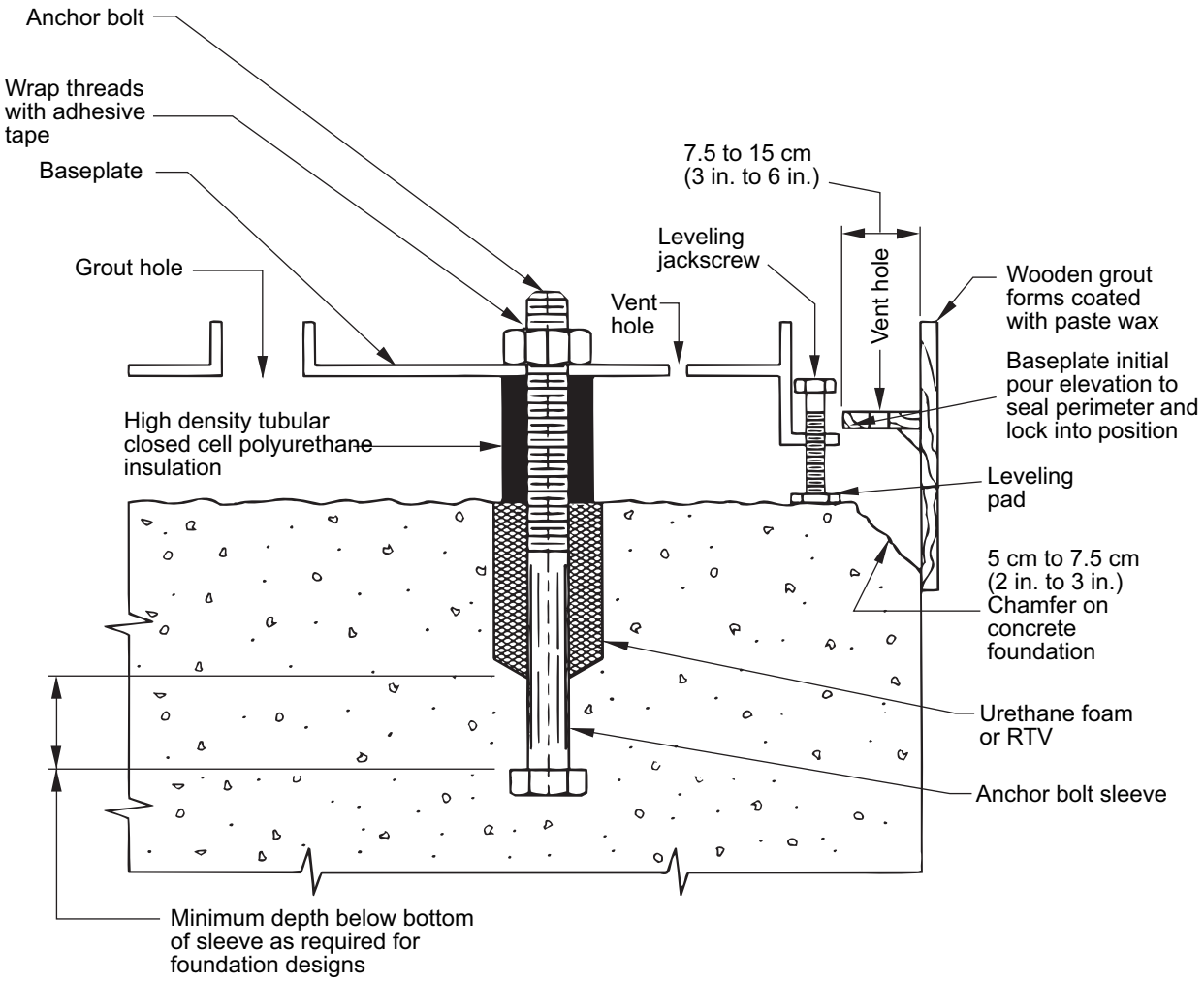

Figure G.1—Typical Grouting Installation of Baseplates for Pumps and General-purpose Equipment

Annex H
(informative)

Typical Mounting Plate Leveling Pads

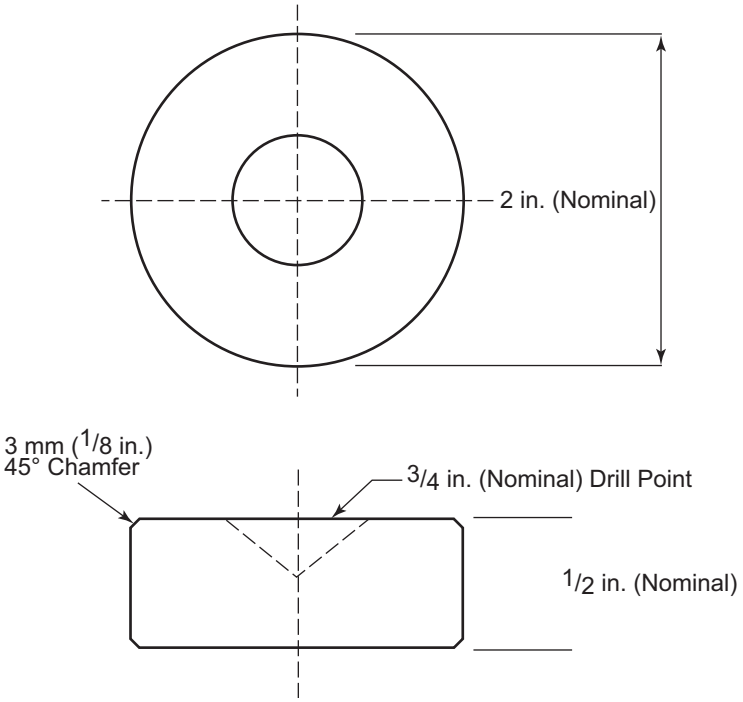

Notes:
1. Materials—stainless steel
2. Cleanliness—free of dirt, oil, scale and burrs
3. The 19 mm (3/4 in.) drill point is only required when the leveling pads are NOT to be grouted in position.

Figure H.1—Typical Mounting Plate Leveling Pads

Annex I
(informative)

Optical Leveling Scope Peg Test

The peg test adjustment is a standard pre-check instrument adjustment used to ensure that accurate leveling (i.e. of soleplates) is achieved. The objective of the peg test is to make the line of optical sight through the scope level when the instrument bubble is centered on or "in" coincidence with the scope. It is essentially the optical equivalent of a 180° reversing of a machinists level to check for repeatability.

The procedure for the peg test is as follows:

1) Set the optical tooling scales at points 1 and 2 as shown in Figure I.1 and at a distance of approximately 40 ft (12.2 m) apart. These scales must be placed absolutely vertically utilizing magnetic bases and placed on a firm base not subject to vibration or settlement and provide good illumination for the scales.

2) Set up the instrument equipped with optical micrometer at point "M" midway between points 1 and 2.

3) With the main bubble centered or in-coincidence, take five readings at "A" and "B," and record the average of each set of these readings.

4) Move the instrument to position "P." Position "P" should divide the distance between the two scales into the ratio of 1:5 [i.e. if the distance between the two scales is 40 ft (12.2 m), "P" should be 8 ft (2.44 m) from Scale #1 and 32 ft (9.75 m) from Scale #2].

5) With the main bubble centered or in-coincidence, take five readings at "C" and "D," and record the average of each set of these readings. If the instrument is within adjustment tolerance (equal to or less than 0.0005 in./ft), "A" minus "B" will equal "C" minus "D." If this is not the case, calculate what reading D_1 should be to make the line of sight level by using the following formula:

$$D_1 = {}^4/_3\,[(B + C)\,(A + D)] + D$$

Actual adjustment procedures for correcting of coincidence misalignment will vary by different manufactures of optical leveling instruments. Consult the OEM's manual for instructions on how to correct for coincidence misalignment.

This document is not intended to be specific as how to adjust every manufacturers optical level, rather the purpose is to provide a method of testing the intended instrument to be used to ensure its reliability and that a quality leveling job will be achieved prior to grouting.

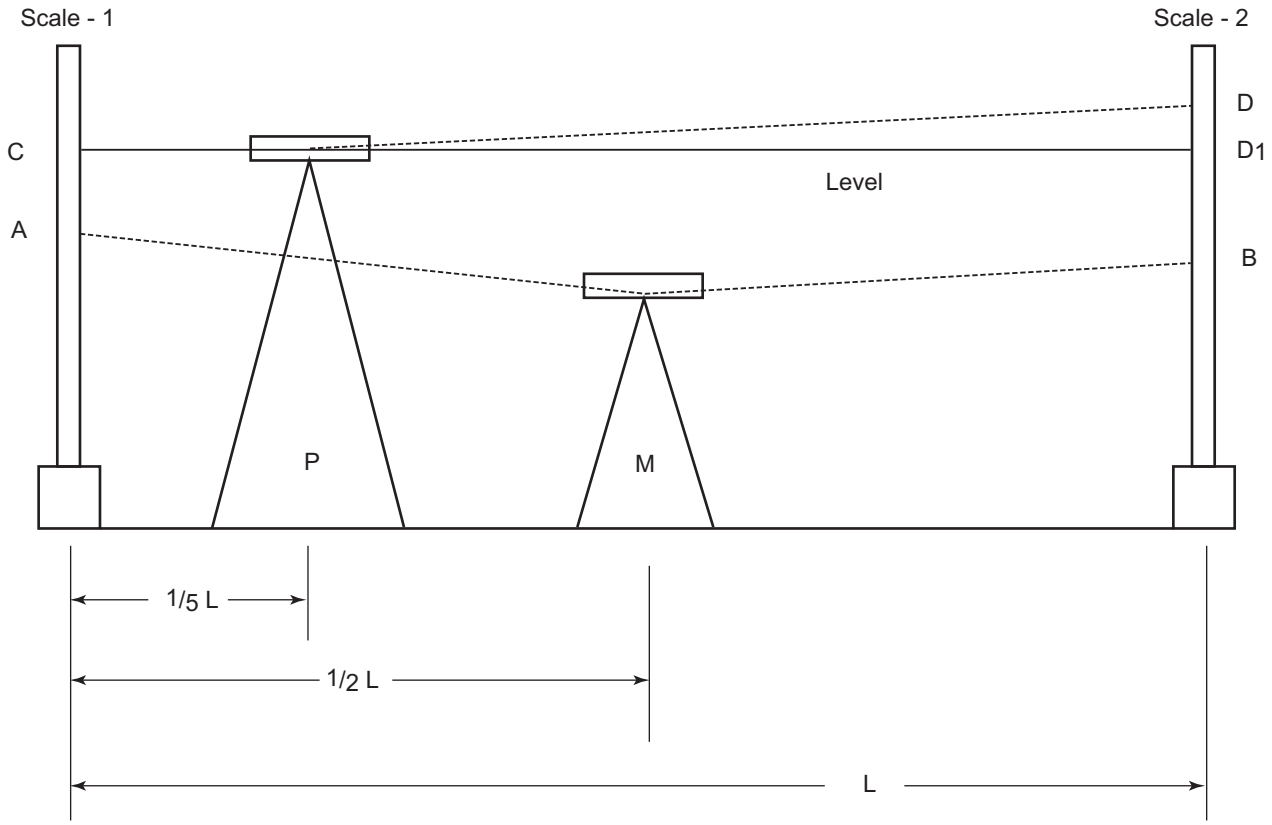

Figure I.1—Peg Test Diagram

Recommended Practice for Machinery Installation and Installation Design

Chapter 6—Piping

Downstream Segment

API RECOMMENDED PRACTICE 686
SECOND EDITION, DECEMBER 2009

American Petroleum Institute

Contents

Page

1 Definitions 6-1

2 Machinery Piping Installation Design 6-5
2.1 Scope 6-5
2.2 Accessibility for Operation and Maintenance 6-5
2.3 Isolation Requirements 6-6
2.4 Piping Supports 6-6
2.5 Provision for Field Welds 6-6
2.6 Pressure Connections and Thermowells 6-7
2.7 Inlet Pipe and Valve Sizing 6-7
2.8 Inlet Strainers 6-7
2.9 Machinery Outlet Piping 6-9
2.10 Vents and Drains 6-9
2.11 Warm-up Lines 6-10
2.12 Positive Displacement Machinery Pressure Relief 6-10
2.13 Piping Systems in Pulsating Service 6-11
2.14 Miscellaneous Auxiliary Piping 6-12
2.15 Commissioning Provisions 6-12
2.16 Oil Mist Systems 6-12

3 Machinery Specific Piping Installation Design 6-14
3.1 Pumps 6-14
3.2 Compressors and Blowers 6-17
3.3 Steam Turbines 6-22

4 Machinery Piping Installation 6-24
4.1 General Requirements 6-24
4.2 Field Installation of Auxiliaries 6-26
4.3 Hydrotest Restrictions 6-26
4.4 Stray Electrical Currents 6-26
4.5 Design Verification 6-27
4.6 Piping Alignment Requirements 6-28
4.7 Piping Alignment 6-28
4.8 Pipe Strain Measurement 6-29
4.9 Spring Hanger and Spring Support Function Check 6-30
4.10 Oil Mist Piping Installation 6-31
4.11 Miscellaneous Requirements 6-32

Annex A (normative) **Machinery Piping Installation Checklist** 6-33

Annex B (informative) **Machinery Installation Piping Diagrams** 6-38

Annex C (informative) **Steam Piping for Turbines** 6-48

Annex D (informative) **Field Relief of Pipe Strain** 6-54

Figures
B.1 Typical Seal Pot Location 6-38
B.2 Typical Steam Turbine Inlet Piping 6-39
B.3 Typical Machinery Piping Schematics 6-40
B.4 Piping Alignment Datasheet 6-41
B.5 Final Field Weld Location 6-42
B.6 Inlet Strainers 6-43

Page

B.7 Oil Mist Piping 6-44
B.8 Spring Hanger Function Checks 6-45
B.9 Single Drop Area for Auxiliary Piping and Conduit 6-46
B.10 Suction Line Slope and Reducers 6-47
C.1 Exhaust Piping Expansion Joint Application—Not Recommended 6-48
C.2 Exhaust Piping Expansion Joint Application—Recommended 6-48
C.3 Exhaust Piping Expansion Joint Application Utilizing Tie Rods 6-49
C.4 Condensing Turbine Expansion Joint with “UP” Exhaust 6-49
C.5 Turbine Short Direct Run to Exhaust Header—Not Recommended 6-50
C.6 Variation of Turbine Short Direct Run to Exhaust Header—Not Recommended 6-50
C.7 Proper Steam Inlet Piping Variation “A” for Flexibility 6-51
C.8 Proper Steam Inlet Piping Variation “B” for Flexibility 6-51
C.9 Proper Steam Inlet Piping Variation “C” for Flexibility 6-51
C.10 Recommended Turbine Inlet Piping Arrangement from Header 6-51
C.11 Recommended Turbine Inlet Piping Arrangement at Header End with Drop Leg 6-51
C.12 Turbine Piping with Rigid Supports—Not Recommended 6-52
C.13 Proper Use of Rigid Piping Supports Utilizing an Expansion Joint 6-52
C.14 Improper Use of Spring Support on Piping Expansion Joint 6-53
D.1 Piping Alignment Overview 6-54
D.2 Piping Alignment Requirements 6-56
D.3 Diamond Heating Pipestrain Relief 6-57

Recommended Practice for Machinery Installation and Installation Design
Chapter 6—Piping

1 Definitions

For the purposes of this document, the following definitions apply.

1.1
blowdown system
A closed system connected to a machine used to depressure and decontaminate the machine preparatory to maintenance activities; also known as a maintenance dropout system.

1.2
breakout spool
A short, flanged length of pipe immediately connected to the machinery piping flanges. Lengths vary with the size of the pipe. The purposes of this spool are to facilitate machinery installation, allow piping modification to reduce pipe strain, isolate the machinery, facilitate commissioning activities such as flushing or blowing lines, and allow removal of temporary inlet strainers; also known as a dropout spool.

1.3
cold load setting
The force exerted by a spring hanger or support on the piping with the piping at ambient temperature and empty of process fluid.

1.4
cold stop
A metal bracket, block or pin inserted into a piping spring hanger or spring support that locks the spring in place at the cold load setting.

1.5
condensing service
A gas stream that contains a vapor component that may condense to a liquid during start-up, operation, or shutdown of a compressor or blower. This may include pure vapors such as refrigerants as well as hydrocarbon gas streams. When condensate is present in the gas stream, the term wet gas may be used; wet gas may also be used as a synonym to condensing service.

1.6
dead-leg
A length of piping with no flow.

1.7
designated machinery representative
The person or organization designated by the ultimate user of the equipment to speak on his/her behalf with regard to machinery installation decisions, inspection requirements, and so forth. This representative may be an employee of the user, a third-party inspection company, or an engineering contractor as delegated by the user.

1.8
drop point
A vertical section of oil mist distribution piping that is usually smaller in diameter than the main oil mist header. This piping rises out of a tee in the main oil mist header, turns horizontally, and extends downward to the machinery being lubricated.

1.9
engineering designer
The person or organization charged with the project responsibility of supplying installation drawings and procedures for installing machinery in a user facility after machinery has been delivered. In general, but not always, the engineering designer specifies machinery in the user facility.

1.10
equipment installer
The person or organization charged with providing engineering services and labor required to install machinery in a user facility after machinery has been delivered. In general, but not always, the installer is the project construction contractor.

1.11
equipment user
The organization charged with operation of the machinery. In general, but not always, the equipment user owns and maintains the machinery after the project is complete.

1.12
final alignment
The aligning of two adjacent machinery shafts after the measurement of piping-imposed strains on the machinery are verified as being within the specified tolerances.

1.13
general-purpose equipment trains
Those trains that have all general-purpose elements in the train. They are usually spared, relatively small in size (power), or are in noncritical service. They are intended for applications where process conditions will not exceed 48 bar gauge (700 lb/in.^{2} gauge) pressure or 205 °C (400 °F) temperature (excluding steam turbines), or both, and where speed will not exceed 5000 revolutions per minute (rpm).

NOTE General-purpose equipment trains have all elements that are either manufacturer's standard or are covered by standards such as the following: ASME B73 pumps, small API 610 pumps, fans, API 611 steam turbines, API 672 air compressors, API 677 general-purpose gears, API 674 reciprocating pumps, API 676 rotary positive displacement pumps, API 680 reciprocating air compressors, and NEMA standard size motors

1.14
isolation block valve
A valve used to isolate a process machine preparatory to maintenance; also known as a block valve or isolation valve.

1.15
manufacturers or vendor representative
The person or organization designated by the equipment manufacturer or warranty holder to speak on his/her behalf pertaining to the equipment handling, installation and use.

1.16
mechanical piping analysis
An analysis of the piping connected to a machine to determine the stresses and deflections of the piping resulting from temperature, pressure and dynamic loadings such as pulsating flow (mixed phase flow). Determination of the type, location, and orientation of piping supports and piping guides results from this analysis.

1.17
minimum flow bypass
See **recycle line**.

1.18
non-slam check valve
A mechanically or hydraulically balanced check valve that allows closure of the valve in a controlled fashion. Wafer-style center-guided spring-loaded split-disc check valves or tilting-disc check valves are representative designs.

1.19
NPS
Nominal pipe size (in.), followed by the specific size designation number without an inch symbol.

1.20
oil mist
A dispersion of oil droplets of 1 to 3 micron size in an air stream.

1.21
oil mist application fittings
Long-path orifices that cause the small oil droplet size in the header (dry mist) to be converted to larger size oil droplets (wet mist) to lubricate the bearings. Oil mist application fittings are also known as reclassifiers.

1.22
oil mist console
A system consisting of the oil mist generator, oil supply system, air filtering system, oil mist header outlet, and necessary controls and instrumentation. Air and oil enter the console to produce oil mist.

1.23
oil mist distributor block
A small rectangular block that has four or more holes drilled and tapped in opposite faces. Drop points terminate in distributor blocks. An oil mist distributor block may also be described as an oil mist manifold block.

1.24
oil mist generator
A device located inside the oil mist console that combines oil and air to make oil mist. Typical oil mist generators use a venturi or vortex to achieve mixing of the oil and the air.

1.25
oil mist header
A network of piping through which the oil mist is transported from the console where it is made to the machinery bearing housing where it is used.

1.26
oil mist supply manifold
A small rectangular or hexagonal block with holes drilled and tapped on the faces. Drop points terminate in the distributor block or supply manifold. The oil mist distributor block or supply manifold may also include a viewing chamber or sight glass. An oil mist distributor block may also be described as an oil mist manifold block.

1.27
oil mist system
A system designed to produce, transport, and deliver oil mist from a central location to a remote bearing housing. This system consists of the oil mist console, distribution piping headers and laterals, application fittings, and the lubricant supply tank and pump.

1.28
preliminary alignment
The aligning of two adjacent machinery shafts before measuring piping strain on the machinery.

1.29
pulsation analysis
An analysis of the piping system connected to a machine to determine the acoustical and mechanical effects of pulsating flow. For small machines a pulsation analysis may consist of comparison to other installations and/or use of proprietary pulsation device design charts, formulas, or graphs. For large, complicated machines a pulsation analysis may consist of a detailed digital or analog modeling of the machine and the piping. Unless otherwise specified, API 618 should be used to provide guidance for the pulsation analysis.

1.30
pure oil mist lubrication
dry sump
The application of oil mist to a machinery bearing housing to lubricate antifriction bearings. The oil mist passes through the bearing elements and oil droplets coalesce out of the air stream. All oil is drained from the machinery bearing housing and the mist alone provides complete lubrication.

1.31
purge oil mist lubrication
wet sump
The application of oil mist to a machinery bearing housing or reservoir to provide a slight positive pressure. Machinery lubrication is provided by the conventional ring oil or submerged bearing lubrication. This prevents contamination that could be caused by infiltration of corrosive agents or condensation of ambient moisture.

1.32
recycle line
A line from the discharge of a pump, blower, or compressor routed back to the suction system. A recycle line will usually include control elements such as meters or valves. The recycle line may connect directly into the suction line or may connect into suction vessels or liquid knockout vessels and may include a cooler; also known as bypass line, minimum flow bypass, or kickback line.

1.33
snug
To tighten bolting with minimal torque. When piping flange bolting is initially tightened to 10 % of the final total torque it is understood to be snug.

1.34
special-purpose equipment trains
Equipment trains with driven equipment that is usually not spared, is relatively large in size (power), or is in critical service. This category is not limited by operating conditions or speed.

NOTE Special-purpose equipment trains will be defined by the user. In general, any equipment train such as an API 612 turbine, API 618 reciprocating compressor, API 613 gear, API 617 centrifugal compressor, or equipment with a gas turbine in the train should be considered to be special-purpose.

1.35
static piping analysis
An analysis of the piping system connected to a machine to determine forces and moments on nozzle connections caused by various loading conditions such as pipe weight, liquid loads, and thermal expansion or contraction. These forces and moments are compared to vendor-allowable loads or national standards to ensure that nozzle loadings meet guidelines. This analysis includes specification of pipe anchors, guides, supports, and sometimes spring supports and expansion joints to control strain. Where large vertical piping displacements occur, machinery may sometimes be mounted on spring-supported baseplates to reduce nozzle loading.

1.36
suction knockout vessel or liquid dropout vessel
A vessel located in the suction line to a compressor or blower used to separate any entrained liquid from the gas stream. It may contain a demister mat and/or centrifugal separators to aid in this separation. Usually, the compressor or blower takes suction from the top of the knockout vessel.

1.37
warm-up line
A line used to purge warm or hot fluid through a process machine. The intention is to heat up or maintain the temperature of a machine to a temperature greater than the surrounding ambient temperature.

2 Machinery Piping Installation Design

2.1 Scope

2.1.1 This recommended practice (RP) is intended to provide guidelines for the installation and pre-installation design of piping that is connected to machinery in petroleum or chemical processing facilities. Equipment user-specified piping specifications shall be utilized for determining piping materials as well as piping fabrication and testing requirements.

2.1.2 This RP covers rotating and reciprocating fluid-handling machinery and includes pumps, compressors, blowers, and turbines in both horizontal and vertical configurations.

2.1.3 It is recognized that forces and moments imposed on the machinery by the piping are unique to each installation. All piping directly connected to the machinery, excluding lube oil and seal flush, shall be reviewed by a qualified piping stress analyst to determine if a static piping analysis is required to ensure nozzle loads are within equipment user-defined standards. The piping engineering designer shall use sound engineering judgment in conjunction with equipment user-defined standards to design a piping system that minimizes loads imposed on the machinery.

NOTE For most machinery, maximum allowable nozzle loads (forces and moments) are established by the machine manufacturer. The equipment user typically adopts these nozzle loads as the equipment user-defined standard. On the basis of equipment user experience and preference, nozzle loadings more or less restrictive than that of the machine manufacturer may be specified as the basis for piping design.

2.2 Accessibility for Operation and Maintenance

2.2.1 The primary intention of these accessibility requirements is to provide direct access to the machinery for plant operating personnel to deal with possible emergencies. Plant operating personnel may be required to isolate the equipment quickly to fight a fire or to mitigate environmental releases. Additional accessibility objectives for the piping designer include avoiding the creation of tripping hazards and low hanging piping that may result in head injuries as well as a desire to minimize the amount of work required to dismantle auxiliary piping and conduits to perform routine maintenance.

2.2.2 Process and auxiliary piping and conduit shall be routed to allow access to machinery for operation, inspection, and maintenance. Process and auxiliary piping arrangements for machinery layouts shall be reviewed during the equipment layout review with the users designated representative.

2.2.3 All auxiliary equipment, piping, conduit, instruments, coolers, seal pots, and so forth, that are mounted separately from the machine and driver shall not interfere with removal of the machine or driver nor with access to the machinery for normal operation and maintenance.

NOTE The location of seal pots and other auxiliary equipment adjacent to the machinery mounting plate is acceptable when specified by the user-designated representative (see Figure B.1).

2.2.4 Auxiliary support piping, conduit, instrumentation, and so forth, shall be designed for a single drop area on baseplate-mounted machinery.

NOTE The intention of a single drop area is to avoid clutter around the baseplate. This maximizes accessibility for operation and maintenance and minimizes the quantity of piping and conduit that must be removed for machinery maintenance (see Figure B.9).

2.2.5 Inlet and outlet isolation block valves and blinding stations around machinery shall be accessible from grade near the machinery.

2.2.6 Branch connections (including vents, drains, pressure, injection, relief, and safety valve connections) in confined spaces, such as under machinery decks, shall be avoided.

2.2.7 Location of branch connections shall be chosen so that connections are not subject to damage during maintenance or from personnel stepping or climbing on the connection.

2.3 Isolation Requirements

2.3.1 Isolation block valves shall be provided in the inlet and outlet piping to and from all machinery.

2.3.2 One or two-piece spectacle blinds shall be provided in the inlet and outlet piping to and from all machinery.

2.3.3 Any temporary or permanent strainer shall be located between the inlet isolation block valve and the machinery inlet connection.

NOTE Isolation using two closed block valves and a vent valve open to atmosphere located between the block valves is known as a "double block and bleed" arrangement. This is an acceptable alternative to spectacle blinds for machinery isolation, provided the process fluid is not toxic, corrosive, or flammable. Removal of a breakout spool and installation of a blind flange is also an acceptable alternative to the use of spectacle blinds for machinery isolation.

2.4 Piping Supports

2.4.1 Piping to and from machinery shall be adequately supported and controlled to meet the design requirements.

2.4.2 Piping design requirements shall include allowable flange loadings, thermal expansion, pulsation, and all other applied forces and moments. These requirements may be set by the machinery manufacturer, industry standards, or the equipment user.

2.4.3 Machinery inlet and outlet piping shall be supported as near to the machine as practical.

NOTE Supporting the machinery inlet and outlet piping close to the machine removes most of the static load and allows identification of piping fit problems during installation as well as allowing easier removal of the machinery for maintenance.

2.4.4 Only those supports specified as a result of the piping analysis shall be provided. The casual addition or deletion of piping hangers and supports during field construction can result in piping stresses not anticipated by the piping designer and is prohibited.

2.4.5 The piping engineering designer shall verify that piping spring hangers and supports are constructed of materials resistant to the effects of atmospheric corrosion anticipated during normal equipment operation and maintenance.

NOTE Cold service equipment such as refrigeration systems can be subject to extensive corrosion due to condensation in moist environments. Equipment installations near salt water can be subject to the accumulation of wind-borne salt particles. Springs and their enclosing metal "cans" will eventually corrode and lock up under these types of conditions. When the spring hanger or support is locked up the piping support system no longer functions as originally designed and excessive piping stresses may be imposed on the machinery resulting in machinery failure. Inspection of pipe hangers for binding or lockup is suggested—especially before reinstalling equipment after overhaul.

2.5 Provision for Field Welds

2.5.1 For all piping NPS 10 or larger, the piping engineering designer shall include provisions for a final piping field weld to facilitate piping installation in accordance with the machinery flange fit-up requirements.

2.5.2 The final piping field weld shall be located between the face of the machinery flange and the first pipe support or isolation block valve (see Figure B.5).

NOTE Piping smaller than NPS 10 typically has sufficient flexibility that there is usually little difficulty in achieving machinery flange fit-up requirements during field installation. However, thick walled pipe smaller than NPS 10 may require a final field weld

due to the greater stiffness and difficulty in meeting flange fit-up requirements. Typical industry practice is to shop fabricate piping smaller than NPS 10 and not perform a final field weld providing flange fit-up requirements can be met.

2.6 Pressure Connections and Thermowells

2.6.1 Pressure measurement connections complete with isolation valves shall be provided on the inlet and outlet piping to and from all machinery. Additional pressure connections shall not be made to the machinery casing.

2.6.2 The inlet pressure connection shall be located between any permanent or temporary start-up strainer and the machinery inlet piping flange (see Figure B.3).

2.6.3 When temperature measurement thermowells are required, they shall be located in the process piping and not in the machine casing. These thermowells shall be located as close as possible to the inlet/outlet flanges of the machine.

NOTE Vendor performance predictions and guarantees for pumps, compressors and turbines are typically based upon operating conditions at the machine inlet/outlet flanges. By locating instrument connections as close to the machine flanges as possible measurement errors can be minimized.

2.7 Inlet Pipe and Valve Sizing

Inlet piping and valves shall be the same size or larger than the machinery inlet nozzle.

NOTE Care must be taken in reducing down to the proper size as this may be done differently for pumps than for compressors. Refer to Section 3.0 of this document for machine specific design details. A larger size pump suction line is typically used to minimize suction line pressure losses resulting in greater net positive suction head available to the pump. A larger sized compressor suction line may be used to minimize horsepower requirements of the compressor.

2.8 Inlet Strainers

2.8.1 Permanent Strainers

2.8.1.1 When specified, strainers shall be provided upstream of machinery handling fluids likely to contain foreign material such as sand, scale, and debris, unless the machinery is explicitly designed to handle this material.

2.8.1.2 The inlet strainer design shall be evaluated to verify that the strainer screen will not collapse under any differential pressures expected during machinery commissioning or operation if the strainer screen becomes completely blocked.

2.8.1.3 Where large accumulations of foreign material are expected and a machine is not spared, either a duplex strainer or two simplex strainers in parallel shall be provided in the inlet line to the machine. If the machine is spared then either a duplex strainer or a simplex strainer on each machine shall be provided.

2.8.1.4 Differential pressure indication shall be provided across the permanent strainer or strainers.

2.8.1.5 Venting capability for permanent strainers shall be provided.

2.8.1.6 Permanent strainers shall not be located closer than five pipe diameters to the machinery inlet nozzle.

2.8.1.7 The open area of the permanent screen or strainer shall have a minimum of 150 % of the open area of the piping.

2.8.1.8 The piping designer in consultation with the machinery manufacturer shall specify the screen mesh or hole size of permanent screens or strainers.

NOTE 1 The screen mesh or hole size is typically determined by the size of the largest particle that can pass through the machine without lodging or causing plugging.

NOTE 2 Typical strainer hole size is 6 mm (1/4 in.). However, there may be applications where a coarser or finer screen is required.

2.8.2 Temporary Strainers

2.8.2.1 Machinery not equipped with a permanent inlet screen or strainer shall be provided with a temporary start-up screen or strainer.

2.8.2.2 Temporary screens or strainers shall be clearly identified by an extended handle or other device. This handle shall project beyond insulation materials. Screen mesh and/or hole size shall be clearly indicated on this extended handle.

2.8.2.3 The open area of the temporary screen or strainer shall have a minimum of 150 % of the open area of the piping.

2.8.2.4 The piping designer in consultation with the machinery manufacturer shall specify the screen mesh or hole size of temporary screens or strainers.

NOTE 1 The screen mesh or hole size is typically determined by the size of the largest particle that can pass through the machine without lodging or causing plugging.

NOTE 2 Typical strainer hole size is 6 mm (1/4 in.). However, there may be applications where a coarser or finer screen is required.

NOTE 3 Screen mesh or hole size may sometimes be determined by a desire to protect equipment downstream from the machine.

NOTE 4 Plans are needed to remove any start-up screen not intended for continuous duty.

2.8.2.5 When fine mesh screen is required for a temporary screen or strainer, the screen shall be located on the upstream side of the strainer.

2.8.2.6 Applications requiring the use of a fine mesh screen or strainer shall be identified by the piping engineering designer.

NOTE Temporary screens or strainers are meant only for protection of machinery during commissioning, start-up, and a short period thereafter if required. It must be noted that this type of screen or strainer can adversely affect machinery performance as a result of its resistance to flow and by causing flow disturbances.

2.8.2.7 Acceptable temporary strainer designs include: conical, truncated conical, and T-type or similar design.

2.8.2.8 The point of the conical strainer shall face upstream in the piping. Screens in T-type strainers shall point with the flow.

NOTE Pointing the conical strainer upstream to the flow allows debris to fall to the outside of the cone around the perimeter of the pipe and so minimize the obstruction to the flow path. This is the preferred orientation for most machinery installations. Conical strainers may be installed with the point oriented downstream when explicitly specified by the designated machinery representative. This may be advantageous in situations where there are space limitations or where removal of the temporary strainer may result in the dropping of debris into the machine inlet (see Figure B.6).

2.8.2.9 Temporary screens or strainers shall be installed in horizontal piping runs whenever possible.

NOTE Locating temporary screens or strainers in horizontal piping facilitates the removal of debris. The location of temporary screens or strainers in vertical piping is acceptable but greater care must be taken to prevent debris from falling into the piping when the screen or strainer is removed.

2.8.2.10 Screen or strainer material shall be stainless steel or as specified by the piping engineering designer.

2.8.2.11 The piping engineering designer or the supplier of the suction screen or strainer shall determine the maximum allowable differential pressure for the device. This information shall be provided to the designated machinery representative for use during machinery commissioning and start-up.

NOTE The intent of this requirement is to facilitate verification of screen or strainer integrity under any differential pressures expected during machinery commissioning or operation if the screen or strainer becomes completely blocked with debris.

2.9 Machinery Outlet Piping

2.9.1 A check valve shall be installed in the discharge line of all pumps, compressors, or blowers, whether centrifugal or rotary, unless there is no possibility of a reversal of flow or pressure surge (such as water hammer) under any conditions. The check valve shall be located between the machine discharge flange and the discharge block valve.

NOTE Discharge check valves do not usually provide a tight seal and should not be relied upon to provide pressure protection of the machinery.

2.9.2 Discharge piping and isolation block valves shall be the same size or larger than the machinery outlet nozzle.

2.9.3 Discharge check valves shall be the same size as the machinery outlet nozzle. Discharge check valves larger than the machinery discharge nozzle are acceptable, providing check valve minimum velocity requirements are met. Discharge check valves smaller than the machinery discharge nozzle may be used, providing pressure drop is evaluated.

NOTE **Check valve sizing and selection are critical**. Some types of check valves require a minimum flow velocity to lift the disk or flapper. An oversized check valve may lack sufficient flow velocity to keep the disk or flapper open. A small check valve may result in excessive pressure drop and increased horsepower requirements. These problems can be avoided by a hydraulic evaluation during system design. For pump applications, the Hydraulic Institute publishes a chart on reverse runaway speed ratio vs specific speed. This chart provides guidance as to the susceptibility of a pump train to overspeed backwards. Check valve capability should be specified to avoid reverse runaway speed.

2.9.4 Check valves installed in vertical piping that require provision for draining liquid trapped above the check valve shall be equipped with an NPS 3/4 or larger bypass around the check valve. This bypass shall be attached to the body of the check valve and shall include a manual block valve. Alternatively, an NPS 3/4 or larger drain connection with block valve shall be provided above the check valve.

2.10 Vents and Drains

2.10.1 For piping runs NPS 3/4 or larger, all vent and drain connections shall be NPS 3/4 or larger. For run piping smaller than NPS 3/4, the vent or drain connection shall be no smaller than the run pipe.

NOTE This requirement for NPS 3/4 vents and drains is intended to provide sufficient strength and rigidity to prevent damage due to externally applied loads.

2.10.2 Piping vents and drains shall be located in breakout spools on the inlet and outlet piping to the machine. These connections shall not be placed in angle sections of reducers.

2.10.3 Machinery casing drain valves shall be located in a convenient location and not under the machine casing. For baseplate-mounted machinery, casing drains shall be routed to the edge of the baseplate. For soleplate-mounted machinery, casing drains shall be routed down to grade level.

2.10.4 Drain valves shall be installed on each drain prior to any manifolding or piping away from the equipment.

2.10.5 Drain valves shall be mounted as near to the machinery as possible.

2.10.6 Drain lines from machinery shall be NPS 3/4 or larger.

2.10.7 Vent and drain lines shall be suitably arranged, isolated, and valved to prevent leakage flow between machines or between separate portions of the same machinery train.

2.10.8 For tabletop mounted machinery, drain valves shall be located beneath the deck as close to the machine as possible. These drain valves shall be accessible from the deck by valve handle extensions or from grade by chain-operated valves.

NOTE Drain valves are located beneath the deck to avoid tripping hazards for operating personnel. Locating the drain close to the machine case minimizes a dead-leg, which can collect undesirable liquids that can freeze or cause corrosion.

2.10.9 Valves NPS 1 1/2 and smaller shall not be equipped with chain operators.

2.10.10 All permanent vent and drain valves not connected to a closed system shall be flanged or shall have female pipe threads. These valves shall be covered with a blind flange or shall be plugged with a solid pipe plug. The flange or pipe plug shall be of material having the same metallurgical and physical properties as the associated piping.

2.11 Warm-up Lines

Machinery handling hot materials greater than 150 °C (300 °F) or high pour point materials shall be provided with warm-up lines to obtain and maintain machinery temperature. Warm-up lines shall be provided with sufficient flanges to allow the piping spool between the machine and the outlet check valve to be removed and/or aligned separately from the warm-up line.

NOTE Warm-up line flanges allow removal of small piping prior to rigging of machine piping spools. This prevents inadvertent damage to the small piping during rigging.

2.11.1 One NPS 1 or larger reverse flow bypass line shall be provided around the discharge check valve.

2.11.2 For all double suction and multistage machines, at least two NPS 1 or larger reverse flow bypass lines shall be provided. One bypass line is around the discharge check valve. The second line bypasses the check valve and is connected into the machinery casing drain.

NOTE Some machinery may require an orifice or globe valve in each warm-up line to break down pressure and control the flow rate. Care should be exercised to ensure detrimental machine rotation does not occur (see Figure B.3).

2.11.3 Warm-up lines shall be heat traced and insulated if the product will solidify at expected ambient temperatures. Warm-up lines shall be insulated to protect personnel from burns if located where personnel normally have access for operation or maintenance of the machinery.

2.11.4 Warm-up lines shall be evaluated for adequate flexibility by the piping designer due to the possibility of differential expansion between the machinery discharge line and the warm-up line.

2.11.5 Warm-up line connections should be discussed with machinery supplier to minimize casing distortions. Checkpoints on the bottom and top of the casing may be necessary to measure and record the top and bottom casing temperatures as well as pumpage temperatures.

2.12 Positive Displacement Machinery Pressure Relief

2.12.1 Positive displacement machinery shall be equipped with a pressure relief device. This pressure relief device shall be located between the machinery discharge connection and the first isolation block valve or blind.

2.12.2 Pressure relief device discharge piping shall be routed to a designated system.

NOTE Typical designated systems include a flare, maintenance dropout or blowdown, thermal oxidizer, the atmosphere, scrubber, process trench, sump, storage tank, suction vessel or other process systems, or the machine suction line.

2.12.3 Pressure relief device discharge piping routed back to the machinery suction line shall enter the system between the suction isolation blind, block valve, or permanent strainer and the machine suction connection.

NOTE Reference additional requirements of reciprocating compressors (see 3.2.5).

2.13 Piping Systems in Pulsating Service

2.13.1 A pulsation analysis and mechanical piping analysis shall be conducted on piping systems for reciprocating machinery or machinery subject to pulsating flow. These analyses shall be used to develop piping systems that minimize pressure pulsation and piping vibration. The pulsation and mechanical piping analyses shall be done in conjunction with a static piping analysis. All additional piping requirements and restraints identified as necessary by the mechanical piping analysis shall be re-checked with the static piping analysis.

NOTE 1 The nature of the analyses will vary with the size, complexity, and configuration of the system. For small, simple systems the analyses may be omitted or may be handled by manual methods. Large or complex systems may require a digital or analog study.

NOTE 2 Some rotary equipment such as lobe-type blowers and dry rotary screw compressors generate pressure pulsation that should be reviewed and pulsation compensation provided.

2.13.2 Pulsation dampeners, accumulators, volume bottles, orifices, and acoustically detuned piping systems shall be provided to reduce pressure pulsation levels in accordance with the pulsation analysis.

2.13.3 Pressure taps with isolation valves shall be provided to enable measurement of pulsation at the machine suction and discharge connections as well as other locations specified by the designated machinery representative.

2.13.4 Based on the data obtained from pulsation and mechanical piping analyses the piping routing, piping supports, restraints, and anchors shall be spaced to avoid resonant lengths and to restrain the generated dynamic forces.

2.13.5 No branch connection shall be installed without a justifiable need. The number of branch connections shall be kept to an absolute minimum.

2.13.6 Branch connections (such as vents, drains, pressure gauge connections, and so forth) shall be located at points where the run line is anchored.

2.13.7 Branch connections shall be installed as far from the source of vibration as practical.

2.13.8 Piping shall be routed as close to grade or to heavy concrete foundations as possible. Rigid anchors and restraints shall be used effectively to properly secure the piping.

2.13.9 Process lines shall be restrained by use of only those rigid pipe anchors, restraints, and friction slides determined necessary by the piping analyses.

2.13.10 Pipe anchors shall be anchored to concrete piers or structural steel. Piers and structural steel shall be designed to provide lateral stiffness needed to restrain dynamic forces.

2.13.11 Reinforcing steel for piers shall be properly developed in the supporting mat or foundation. Any piping supports to be added after initial installation shall be reviewed by a mechanical piping analysis. Supports required by the piping analyses added after initial installation shall be securely attached to the mat. Expansion bolts and other mechanical connections are not satisfactory for pulsating service and shall not be used.

2.13.12 Branch connections shall be kept as short as possible to minimize the vibration moment arm. Where large masses such as relief or safety valves cannot be avoided, they shall be properly braced.

2.14 Miscellaneous Auxiliary Piping

2.14.1 Cooling water piping shall be made from a minimum NPS 1 Schedule 80 steel pipe. Cooling water piping shall be no smaller than the largest connection to the water jacket or heat exchanger.

2.14.2 Cooling water tubing shall be made of stainless steel with a minimum 1 mm (0.035 in.) wall thickness. Minimum acceptable size is 12 mm (0.5 in.) tubing diameter. Copper tubing is not acceptable.

2.14.3 When site thermodynamic performance measurements are to be made on a machine, sufficient pressure, temperature, flow, and sampling connections shall be provided.

NOTE Instrument type, location, accuracy, and redundancy may have a significant impact on the ability to obtain data with sufficient accuracy to determine field performance. For specifics on pressure, temperature, flow, and sampling connections refer to the relevant performance test code (PTC).

2.14.4 Elevation of the seal pot above the shaft centerline as well as the actual piping distance from the pot to the seal shall be in accordance with the recommendations of the mechanical seal manufacturer or the machine manufacturer.

2.14.5 Instrument connections shall be arranged to permit free drainage of condensed liquids.

NOTE Drain valves should be avoided, as impulse lines may not be drained on a regular basis.

2.15 Commissioning Provisions

2.15.1 Where piping is to be steam cleaned or purged during commissioning, temperature limits and thermal effects shall be included in the design.

2.15.2 Where piping and vessels are to be chemically cleaned during commissioning, provisions to facilitate this cleaning shall be included in the piping design.

2.15.3 Steam inlet piping to machinery shall be designed such that steam blowing is possible for each branch and to each end use without major dismantling or difficult access. Any special steam blowing exits, supports, condensate drains, sample points, bypasses, and so forth, shall be included in the piping by the piping engineering designer.

2.15.4 The piping design of gas systems shall include provisions for draining and drying out the piping system after completion of hydrotesting.

NOTE Temporary supports may be required during hydrotest to prevent overstressing piping or machinery nozzles that remain connected.

2.16 Oil Mist Systems

2.16.1 Oil mist main and branch headers shall not be valved.

NOTE Valves introduce unnecessary flow disruptions that may cause the oil to coalesce from the mist or they may be inadvertently shut.

2.16.2 Piping unions shall be used at the oil mist console between the console and the main oil mist header.

NOTE Unions allow disconnection of the mist header for cleaning and commissioning as well as replacement of the console.

2.16.3 Oil mist main and branch headers, and drop point lateral and vertical piping shall be screwed, galvanized steel pipe. Tubing used in the oil mist system shall be stainless steel.

2.16.4 Oil mist main and branch headers shall be sloped continuously back to the oil mist console. Only when obstructions prevent continuous sloping back to the console shall oil mist main and branch headers be sloped away from the oil mist console to a system designated by the equipment user.

NOTE As oil mist is transported, some of the mist coalesces and accumulates as oil in the piping. With oil mist piping sloped back to the oil mist console, liquid oil accumulating in the piping drains back to the oil mist generator reservoir. The oil usage is much lower because only mist that reaches the machinery is consumed. Liquid oil can accumulate in a pipe and block the mist flow if the pipe is not sloped properly.

2.16.5 Oil mist main and branch headers shall be sloped a minimum of 2 cm per 5 m (1 in. per 20 ft). Greater slope is acceptable.

2.16.6 Oil mist main and branch headers shall be supported on top of horizontal beams or pipe racks with structural angle iron.

2.16.7 Pipe sag of oil mist main and branch headers shall not exceed one-third of the pipe inside diameter. Unsupported spans of oil mist main and branch headers shall not be greater than the distance between adjacent beams.

NOTE Coalesced oil will pool in low spots within the piping headers. Limiting piping sag to one-third of the pipe diameter prevents oil pools in the piping sag from blocking the flow of oil mist (see Figure B.7).

2.16.8 Horizontal bracing shall not be used to support horizontal oil mist main and branch headers.

2.16.9 Main oil mist headers shall be run as close to the outside of the pipe rack as possible and in such a manner as to leave space for future additions of process piping in the pipe rack.

2.16.10 Oil mist branch headers shall be connected to the top of the main header with screwed tees.

2.16.11 Oil mist main and branch header piping shall be NPS 2 or larger.

NOTE NPS 2 is usually adequate for most installations. A larger pipe size may be required in oil mist systems serving a large number of lubrication points. The size of the header should be large enough to limit the oil mist velocity to a maximum of 7 m/s (22 ft/s) at the maximum oil mist generator capacity. Main and branch headers smaller than NPS 2 are discouraged due to the necessity of providing additional piping supports to prevent the increased sag resulting from the smaller pipe size and the greater vulnerability to mechanical damage.

2.16.12 Oil mist drop point lateral piping shall be NPS $^{3}/_{4}$.

2.16.13 Oil mist drop point lateral piping shall come vertically off the top of the main header through a screwed tee.

2.16.14 Oil mist drop point lateral piping shall slope continuously to the main or branch header. When obstructions prevent continuous sloping back to the header, oil mist drop point lateral piping shall slope continuously to the drop point.

2.16.15 Oil mist drop point lateral piping shall be sloped a minimum of 2 cm per 5 m (1 in. per 20 ft). Greater slope is acceptable.

2.16.16 Oil mist drop point vertical piping shall terminate and distribution blocks shall be located 1 m (3 ft) above the machinery to be lubricated.

2.16.17 Oil mist drop point piping shall be located such that access for operation and maintenance of the machinery is not obstructed. Dismantling of oil mist drop point piping, the distribution block or supply manifold for maintenance is not acceptable.

2.16.18 Oil mist drop point lateral piping horizontal runs shall not exceed 10 m (30 ft).

2.16.19 Block valves shall not be installed in oil mist drop point piping.

2.16.20 Oil mist drop point distribution blocks or supply manifolds shall include a sight glass.

NOTE The sight glass is typically a small, molded, clear plastic or glass device mounted at the bottom of the distribution block or supply manifold to provide an indication of condensed oil level in the drop point. The sight glass may also be provided as an integral part of the oil mist supply manifold. Alternative designs are acceptable.

2.16.21 Oil mist drop point distribution blocks or supply manifolds shall be equipped with a valve to permit the draining of oil. Distribution block drain valves shall be snap-acting, petcock, or other type that cannot opened by vibration.

2.16.22 Oil mist application fittings (reclassifiers) shall be mounted in the distribution block or supply manifold.

NOTE Mounting the oil mist application fittings (reclassifiers) in the distribution block or supply manifold is preferred as it prevents the loss of these fittings when the equipment is removed for maintenance. Oil mist application fittings (reclassifiers) may be mounted directly in the machinery bearing housing but greater care must be used when removing the machine for maintenance to prevent loss of the fittings or depressurization of the oil mist header.

2.16.23 Oil mist feed lines from the distribution block to the machinery bearing housing shall be 6 mm ($^1/_4$ in.) or larger diameter stainless steel tubing.

2.16.24 Oil mist feed lines shall slope continuously downward to the machinery bearing housing. Right angle turns or bends shall be minimized.

3 Machinery Specific Piping Installation Design

3.1 Pumps

3.1.1 General Requirements

3.1.1.1 Auxiliary piping to pumps such as gland liquid, flushing liquid, cooling water, quench steam, and so forth, shall be equipped with isolation block valves located at the pump.

3.1.1.2 Non-slam check valves shall be used in the discharge lines of centrifugal pumps in large systems. Acceptable non-slam check valves include wafer-style center-guided spring-loaded split-disc check valves or tilting-disc check valves.

NOTE Large systems are typically those used to transfer water or other fluids in large volumes and/or long distances. Non-slam check valves should be considered for pumps with greater than 185 kilowatt (250 horsepower) nominal driver rating or NPS 12 or greater piping.

3.1.1.3 Pumps that handle volatile fluids at or near the fluid's vapor pressure and that are not self-venting shall have a casing vent line back to the fluid source or other suitable system. Vent piping shall not be less than NPS $^3/_4$.

3.1.1.4 The use of expansion joints or flexible hose in permanently mounted pump suction and discharge lines as a method of compensating for piping misalignment is not acceptable.

NOTE Properly designed piping with spring hangers and supports has sufficient flexibility that expansion joints and hoses are not necessary. Permanently mounted pumps are foundation mounted and exclude mobile equipment. Correction of piping misalignment is to be addressed using the methods described in Section 4 of this document.

3.1.2 Pump Suction Piping

3.1.2.1 Pump suction piping shall be arranged such that the flow is as smooth and uniform as practicable at the pump suction nozzle. To accomplish this, the use of tees, crosses, valves, reduced port valves, strainers, near run-size branch connections, and short radius elbows shall be avoided near the suction nozzle.

3.1.2.2 The net positive suction head available (NPSHA) for the suction piping configuration shall be checked and compared to the net positive suction head required (NPSHR) for all pumps. For centrifugal pumps, NPSHA shall be greater than NPSHR in accordance with PIP RECP001, *Design of Centrifugal Pump Applications*. For pumps other than centrifugal pumps, NPSHA shall be greater than NPSHR in accordance with API 674, *Positive Displacement Pumps—Reciprocating,* API 675*, Positive Displacement Pumps—Controlled Volume*, or API 676*, Positive Displacement Pumps—Rotary*, as applicable.

3.1.2.3 Suction piping shall be designed without high points to collect gas or vapors. When the liquid source is located above the pump centerline, the suction piping shall be sloped toward the pump. When the liquid source is located below the pump centerline the suction piping shall be sloped away from the pump. The slope of the suction piping shall be a minimum of 10 mm per m ($^1/_8$ in./ft) (see Figure B.10).

NOTE 1 "Sloped toward the pump" means that the pump is lower than the piping. "Sloped away from the pump" means that the piping is lower than the pump.

NOTE 2 The objective of sloping the pump suction line is to prevent the accumulation of gas or vapor in pockets that can result in pump cavitation. Sloping the pump suction line toward the pump is preferred as it allows any gas or vapor to escape back to the suction tank or vessel. Sloping the suction line away from the pump allows gas or vapor to escape from the suction line into the pump case. Gas or vapor may then require manual venting to prime the pump if the pump is not of a self-venting design.

3.1.2.4 Refer to ASME/H.I. 9.6.6.6 for piping configurations. Reducers used in horizontal suction lines shall be eccentric and shall be installed to avoid pocketing of vapors in the suction line. The flat side of the eccentric reducer shall be on top. Drain connections shall not be placed on the angle of the reducer. Reducer sections shall include provision for draining.

NOTE 1 Orienting the eccentric reducer with the flat side on top prevents the creation of a pocket that can trap gas or vapor. To be effective the drain from the reducer must be located at a low point and not in the angled portion of the reducer. The requirement of a drain is to ensure that all liquid can be removed from the suction line prior to removing the pump for maintenance.

NOTE 2 When the piping must be completely drained to remove hazardous liquid or solids before performing maintenance the eccentric reducer in the horizontal pump suction line may be oriented with the flat side on the bottom. For example, it is desirable that hydrofluoric acid piping be completely drained to avoid pockets of material that may prove hazardous to maintenance personnel (see Figure B.10).

3.1.2.5 The reducer shall be concentric for overhead piping into a top suction pump.

3.1.2.6 The pump suction line shall have a minimum straight run of five pipe diameters between the pump suction flange and the first elbow, tee, valve, reducer, permanent strainer or other obstruction. The straight run shall be of the same line size as the pump suction nozzle.

NOTE The straight run length of five pipe diameters is usually sufficient to ensure stable and uniform flow at the pump impeller for typical centrifugal pumps. This results in fewer pump failures over the life of the pump due to vibration caused by flow induced turbulence. High speed or high energy centrifugal pumps may require greater suction line straight run lengths. The pump manufacturer may be consulted for additional requirements for specific types of pumps.

3.1.2.7 The pump suction line straight run requirement of at least five pipe diameters may be reduced through the utilization of appropriate engineered flow straightening devices when explicitly approved by the designated machinery representative.

NOTE It is preferable for the piping designer to meet the straight run requirements without the use of flow straightening devices to avoid introducing additional pressure drop in the suction line as well as minimizing the potential for plugging.

3.1.2.8 The last pipe elbow in the suction line to a pump shall be a long radius elbow.

3.1.2.9 Pump suction lines shall be routed to avoid changes in the temperature of the fluid being pumped. Lines containing cold high vapor-pressure fluids shall not be routed near hot lines or equipment, as the heat from the hot lines may vaporize the cold fluid.

3.1.2.10 For pumps taking suction from vacuum towers or columns, an equalizing line from the pump back to the vapor space in the tower or column shall be provided to vent the pump at start-up.

3.1.2.11 Permanent strainers installed in the pump suction line shall be fully self-venting back to the liquid source.

NOTE Some strainer designs trap gas or vapor thus forming a gas pocket. These types of strainer are not suitable for use in the suction line to a pump. This may be of concern when a strainer is installed in the suction line to a standby lube oil pump for a machine train. Minute air bubbles that have not disengaged in the lube oil tank can migrate and disengage from the oil to create a vapor trap between the strainer and the lube oil pump. The standby lube oil pump may then fail to take suction when started.

3.1.2.12 When the pump is of a double suction impeller design, the piping designer shall consult with the pump manufacturer regarding the suction piping orientation including the position and orientation of elbows, tees, valves, reducers and straight runs.

NOTE Elbows and valves improperly located or oriented may cause poor flow distribution and excessive turbulence resulting in cavitation and high thrust loads.

3.1.3 Pump Minimum Flow Bypass

3.1.3.1 A minimum flow bypass shall be provided when the process or operating practice cannot ensure that the flow rate of the pump will be equal to or greater than the minimum continuous flow of the pump. Minimum continuous flow shall be a calculated or measured value provided by the pump manufacturer and not an approximation.

NOTE Pump minimum flow is based on considerations of hydraulic stability and thermal rise. The normal practice is to use the higher of these values for establishing minimum pump flow.

3.1.3.2 The minimum flow bypass line shall be routed from the pump discharge to the suction vessel, tank, sump, or pump suction line. An analysis shall be made that considers the thermodynamic properties of the liquid, the amount of liquid to be recirculated, and the size of the suction vessel, tank, sump, and piping fluid volume as well as pump internal recirculation. When indicated by this analysis, a cooler shall be installed in the bypass line. The designated machinery representative shall agree with the return entry location of the minimum flow bypass line.

3.1.3.3 When the minimum flow bypass line is routed into the pump suction line, it shall re-enter the suction line as far from the pump suction nozzle as practical. This re-entry to the suction line shall be at least five pipe diameters upstream of the pump suction nozzle.

NOTE 1 The intention of locating the minimum flow bypass re-entry to the suction line far from the pump suction nozzle is to minimize flow turbulence so as to avoid creating an additional pressure drop resulting in NPSH difficulties. The re-entry nozzle to the suction piping requires care in design to minimize the creation of additional turbulence.

NOTE 2 Bypass control is often used on high specific speed pumps, such as axial flow pumps, because the power requirement decreases with increased flow.

3.1.3.4 Pumps shall have a low-flow alarm or bypass system to alert the operator if the pumps can be operated periodically against a closed discharge control during normal operation and/or start-up.

3.1.3.5 Control of flow through the recirculation line may be by any acceptable instrumentation including a restriction orifice or a flow-sensing element with an associated control valve, a self-contained auto recirculation valve, or a combination of a flow-sensing element, solenoid valve, and restriction orifice.

3.1.4 Vertical Pumps

3.1.4.1 Suction and discharge piping for vertical in-line pumps shall have adjustable supports. These supports shall be located within 1 m (3 ft) of the pump's suction and discharge flanges. The adjustable supports shall have a means of locking their positions to preclude change due to vibration or unwarranted casual adjustment.

3.1.4.2 Vertical pumps shall be piped to drain any fluid that accumulates in the driver support structure. This drain line shall be NPS 1 or larger with a visible open end.

3.1.4.3 Vertical pumps shall include provision for the venting of gases from the seal gland plate. On API-US6 vertical can pumps, vent the can, seal chamber and discharge before starting. Vent connections shall be connected to a designated system or to the pump suction or discharge piping at a higher elevation than the seal gland plate.

NOTE As the seal is located at the highest point in a vertical pump, venting of any trapped air or vapor ensures the pump seal chamber is liquid-full prior to starting the pump. Typical designated systems include a flare, maintenance dropout or blowdown, thermal oxidizer, the atmosphere, scrubber, or other process systems.

3.1.5 Canned Motor Pumps

3.1.5.1 All services where the pumped product contains particulate material shall have a flush injection as described in API 682, Plan 32 or API 685, Plan S 32.

3.1.5.2 The area directly behind the motor end of the canned motor pump shall be clear of any obstruction for a distance equal to the length of the pump. This is necessary to allow disassembly of the pump in the field.

3.1.5.3 If the pump has an auxiliary flush, the flush piping shall be arranged so that none of the components are located in the area directly to the rear of the pump except for the final section of connecting tubing.

3.1.5.4 There shall be a breakout spool in the suction line between the suction strainer and the pump suction flange that is at least 30 cm (12 in.) long.

NOTE The purpose of this breakout spool is to allow access to the impeller to perform a motor rotation check and cleaning of the suction strainer.

3.2 Compressors and Blowers

3.2.1 General Requirements

3.2.1.1 Auxiliary process piping connected to compressors and blowers shall include isolation block valves and isolation blinds. This auxiliary piping includes connection to flare systems, suction vessel drain manifolds, compressor packing vents, distance piece drain manifolds, and so forth.

NOTE These valves and blinds may be omitted for compressors and blowers in air service if the omission does not compromise operation or safety integrity.

3.2.1.2 When a precommissioning test run is specified by the equipment user, the piping engineering designer shall include provisions for opening hand holes or manways on the suction vessel and piping and exhausting through restrained temporary piping.

NOTE A pre-commissioning test run consists of operating a machine on air prior to the introduction of process gas such as nitrogen, hydrocarbon, and so forth, during the machinery commissioning phase. This test run is done with open flanges and/or valves removed so that the machine does not build pressure or generate temperature and can freely inlet and exhaust to the atmosphere.

3.2.1.3 When compressor or blower piping is to be chemically or mechanically cleaned, it shall be designed to facilitate this cleaning without extensive piping removal.

NOTE Mechanical cleaning methods such as high pressure water cleaning ("hydroblasting") may be more cost effective for compressor piping larger than 10 NPS where the large volumes of chemical and subsequent waste disposal costs associated with chemical cleaning can be eliminated. The piping designer should consult with the cleaning contractor to verify that the piping spools are designed for effective cleaning using these methods. For example, a "hydroblasting" spray nozzle may not be able to navigate a piping spool with more than three 90° elbows.

3.2.2 Suction Piping

3.2.2.1 Inlet piping to compressors and blowers shall be free of sections where liquid may accumulate during normal operation, start-up, and/or shutdown. Where such sections are unavoidable, suitable drain facilities shall be provided.

3.2.2.2 When horizontal reducers are installed in the inlet piping to compressors or blowers, they shall be eccentric with the flat side on the bottom of the pipe to prevent the accumulation of any liquids.

3.2.2.3 Suction piping to compressors in condensing service shall be designed for automatic condensate removal from low points in the compressor piping systems when the machine shuts down.

3.2.2.4 Suction vessels for compressors handling a wet gas that may condense during shutdowns shall be located as close as possible to the compressor. Suction piping layout shall be free of sections where standing liquid may accumulate and shall slope back toward the suction vessel. Adequate drains on the piping shall be provided to remove any standing liquids. Suction lines to wet gas compressors shall be heat traced and insulated.

3.2.2.5 Suction knockout vessels shall have demister pads and internal separators (if required) that assist in removing liquids.

NOTE Suction knockout vessels are designed to separate any entrained liquids from the gas stream.

3.2.2.6 Suction knockout vessels shall be independent of any pulsation suppression devices that may also be installed.

3.2.2.7 Drains on suction vessels shall be large enough to allow removal of any debris expected during normal operation.

3.2.2.8 The design of inlet ducting, nonmetallic seals and expansion joints, filters, and silencers in inlet ducts shall be such that no parts of the ducting, seals, or joints can be drawn into the machine in the event of material failure.

3.2.2.9 The suction line to each compressor or blower section shall be provided with a permanent or temporary strainer.

3.2.2.10 The screen size used in the strainer shall be evaluated for each compressor installation. This evaluation shall include a verification that the strainer/screen will not collapse under any differential pressures expected during compressor commissioning or operation if the strainer screen becomes completely blocked.

NOTE Non-lubricated (NL) compressors typically require finer mesh screens than lubricated compressors. Typical strainer construction consists of perforated plate with holes approximately 6 mm ($^1/_4$ in.) in diameter. If finer mesh screen is used, it is typically attached to the perforated plate of the strainer using the perforated plate for backing support. The fine mesh screen is installed on the upstream side of the strainer. Other screen designs may be acceptable if approved by the designated machinery representative.

3.2.2.11 For compressor or blower suction lines NPS 20 and smaller, a flanged breakout spool with an in-line temporary strainer shall be located in the horizontal line as close as practical to any vertical run into the machine. Removal and cleaning of the strainer spool shall be considered in placement of the spool. Piping supports are

required on each side of the spool piece. If the piping is supported by spring hanger or spring support, a locking device shall be permanently attached to the spring to lock the spring when the piping hanger or support is removed. Pressure connections shall be provided on both the upstream and downstream side of the screen or strainer.

NOTE As an alternative, consider installing a T-type strainer to minimize cleaning efforts during commissioning and start-up.

3.2.2.12 Compressor or blower suction lines larger than NPS 20 but less than NPS 30 shall have a permanent screen or strainer installed in the horizontal run of pipe downstream of the inlet block valve and as close as practical to any vertical run into the machine inlet. Pressure taps shall be provided on both the upstream and downstream side of the screen or strainer. The screen or strainer shall be able to withstand instantaneous loading assuming 100 % blockage of the holes and maximum suction pressure. The suction line shall have flanged clean-out holes upstream and downstream of the screen or strainer. Clean-out holes shall be one-half of the suction line size up to a maximum of NPS 10.

NOTE The requirement for a permanent strainer in large pipes is intended to facilitate removal of debris. It is also intended to avoid potential problems with the forces necessary to restrain a plugged temporary screen.

3.2.2.13 For "down-connected" tabletop mounted compressor or blower suction lines NPS 30 or greater, the suction line transition from horizontal to vertical shall be made using a tee with the long axis (run) oriented vertically. A blind flange or manway shall be provided at the lower end of the tee to provide access to physically inspect and remove debris from this line. Suction strainers are not required.

NOTE As tees may sometimes cause flow disturbances, a removable elbow may be used if approved by the designated machinery representative.

3.2.2.14 Compressor or blower suction lines greater than NPS 30 shall be provided with an additional tee/blind flange or manway in the horizontal run of pipe near the upstream vessel. This shall be conveniently oriented for access from an adjacent platform, ladder, and so forth. The intent is to allow 100 % inspection of the compressor or blower suction piping from the suction vessel to the compressor or blower inlet flange.

NOTE It is sometimes advantageous to clean debris from NPS 30 or larger pipe by entering the pipe, and sweeping it out by hand or using a vacuum cleaner. This can be more cost effective than large screens for catching debris.

Caution—Entering pipe is considered working in a confined space.

3.2.3 Recycle Lines

3.2.3.1 Routing of compressor recycle lines shall be designed to prevent liquid from accumulating in piping low points. Recycle piping layout shall be free of sections where standing liquid may accumulate and shall slope toward the suction vessel. Adequate drains on the piping shall be provided to remove any standing liquids. Recycle lines on compressors handling a wet gas shall be heat traced and insulated.

NOTE "Slope toward the suction vessel" means that the suction vessel end of the recycle line is lower than the compressor end of the recycle line. This is preferred as it allows the recycle piping to be free-draining.

3.2.3.2 Compressor recycle lines shall reenter the process stream on the top of the piping upstream of the suction vessel.

NOTE Possible flow-induced vibration should be considered during design. A designated nozzle in the suction vessel may be an acceptable alternative design.

3.2.3.3 An analysis shall be made that considers the thermodynamic properties of the gas, the amount of gas to be recycled, the size of the suction vessel, piping fluid volume as well as compressor internal recirculation or losses. When indicated by this analysis, a cooler shall be installed in the compressor recycle line. The designated machinery representative shall agree with the return entry location of the compressor recycle line.

NOTE Recirculation of process gas through a compressor recycle line for extended periods can result in excessive heating of the process gas. Limiting process gas temperatures to reasonable values is usually accomplished by installation of a cooler or by making the suction vessel and piping large enough to provide sufficient surface area that heat can be dissipated to the environment by convection.

3.2.3.4 For systems handling corrosive or erosive gases or vapors, the location of the recycle line tie-in to the process line shall be reviewed by a corrosion/materials engineer or metallurgist for potential corrosion problems.

3.2.3.5 Anti-surge recycle valves and discharge check valves shall be located as close as practical to the compressor. The discharge line shall be designed such that the volume of gas in the line between the compressor flange and the anti-surge valve and the discharge check valve does not exceed the compressor manufacturer's design limit.

3.2.3.6 Compressor anti-surge sensing instrumentation shall be located between any permanent or temporary suction screen or strainer and the compressor suction nozzle.

NOTE The purpose of this requirement is to prevent the increased variable pressure drop associated with a screen or strainer from interfering with the compressor anti-surge controls.

3.2.3.7 Compressor discharge temperature measuring instrumentation shall be located in the compressor discharge piping between the compressor discharge flange and the recycle line take-off.

3.2.3.8 The recycle line take-off from the compressor discharge line shall be located between the compressor discharge flange and the discharge check valve.

NOTE The intent of this requirement is to prevent over pressuring the compressor suction line with discharge gas when the compressor is shutdown.

3.2.4 Centrifugal and Rotary Compressors and Blowers

3.2.4.1 A straight run of piping with a minimum length as specified by the compressor or blower manufacturer shall be provided between the machine inlet nozzle and the first elbow or tee. If this straight run length is not specified by the machine manufacturer, a straight run of at least five pipe diameters shall be provided. The minimum length shall be calculated using the diameter of the compressor or blower inlet nozzle.

3.2.4.2 A non-slam (damped) check valve shall be provided in the discharge pipe run from all compressors or blowers.

3.2.4.3 The discharge line for compressors and blowers shall be designed such that the volume of gas in the line between the discharge flange and the anti-surge valve and the discharge check valve does not exceed the compressor or blower manufacturer's design limit.

NOTE This requirement relates to transient response of the compressor control system and affects compressor stability.

3.2.4.4 A mechanical stop shall be provided on inlet throttle control valves when utilized on centrifugal compressors or blowers with constant speed drivers. This mechanical stop shall be set to allow minimum flow through the machine as recommended by the machine manufacturer.

NOTE Some flow control may be provided by variable-speed drives, and/or inlet control valves, or guide vanes. For constant-speed motor drivers, throttling of the inlet valve provides reduced load for start-up.

3.2.4.5 Suction piping configuration for double flow centrifugal compressors or blowers shall be geometrically symmetrical.

3.2.5 Reciprocating Compressors

3.2.5.1 For compressors handling condensing gases, the suction piping from the liquid knockout vessel shall be routed overhead to the compressor suction pulsation dampener vessel. For noncondensing gases, the piping may be routed to grade before going into the suction pulsation dampener vessel.

3.2.5.2 Reciprocating compressor discharge lines shall not have check valves. However, a check valve shall be provided and located downstream of the recycle line if the compressor is equipped with a recycle line. The piping engineering designer shall verify that the check valve is suitable for extended service in pulsating flow.

NOTE Conventional swing check valves are usually not suitable for use in pulsating flows because frequent flow reversals result in premature valve failure.

3.2.5.3 Vent lines from reciprocating compressor pressure packing in condensing service shall be routed to a drain pot to remove liquids before being routed to the vapor disposal system. Vent and drain lines shall be routed so as not to obstruct any access covers or openings.

3.2.5.4 For reciprocating compressors handling condensing materials, the suction piping from the suction vessel to the compressor shall be heat traced and insulated to prevent liquid condensation in the piping. The compressor suction pulsation vessels shall also be heat traced and insulated. Vessels and piping covered by insulation shall be properly protected from corrosion.

3.2.5.5 A pressure relief device or devices shall be provided for each compressor cylinder or stage of a reciprocating compressor. These relief devices may be located in either the discharge piping or on the liquid knockout vessels. Relief devices shall be located between the compressor cylinder and any permanent blinds or block valves.

3.2.5.6 Pressure relief devices shall be sized and rated to avoid exceeding the lesser of piping pressure ratings, pulsation vessel pressure ratings, cylinder pressure ratings, or rod loads.

NOTE Though rod load is a factor to be considered in the sizing and rating of reciprocating compressor discharge pressure relief protection, installation of discharge pressure relief protection does not, by itself, ensure rod loading requirements will not be exceeded. Rod load is a function of the differential pressure across a cylinder as well as inertia. Suction pressures less than or greater than the operating range indicated by the compressor manufacturer may result in unacceptable rod loads despite discharge relief protection.

3.2.5.7 Piping shall meet the design criteria specified by the pulsation analysis, piping mechanical analysis, and static piping analysis.

3.2.5.8 Drains from compressor distance pieces, packing vents, leakoffs from unloaders, and distance piece vents shall be routed in accordance with API 618 or as specified by the designated machinery representative. Drain lines shall be routed so as not to obstruct any access covers or openings. Process and vent piping shall not be routed over the compressor crankcase. The area above the compressor crankcase shall be kept clear of all piping and electrical conduits.

3.2.5.9 Compressor pulsation vessel drains shall be manifolded into a single drain line. Drain line primary block valves shall be provided at each pulsation vessel. Additional drain valves shall be provided at the manifold. When a deck is provided, the manifold shall be located at grade near the edge of the decking.

3.2.6 Rotary Screw Compressors

3.2.6.1 For rotary screw compressors handling condensing gases, the suction piping from the liquid knockout vessel shall be routed overhead to the compressor suction flange. For noncondensing gases, the piping may be routed to grade before going into the compressor suction flange.

3.2.6.2 For oil flooded rotary screw compressors; the compressor discharge line shall be sized and installed per API 619 to accommodate a mixed gas/oil flow.

3.2.6.3 Oil flooded rotary screw compressor discharge lines shall contain a check valve to minimize oil backflow upon shutdown. The piping engineering designer shall verify that the check valve is suitable for extended service in pulsating flow of an oil/gas mixture.

NOTE Conventional swing check valves are typically acceptable for use in rotary screw compressor applications because pulsating flow variations are generally small.

3.2.6.4 The oil flooded rotary screw compressor scavenged oil line, from gas/oil separator coalescing filter downstream side, shall be routed back to the compressor as per manufacturer's directions. Scavenged oil and compressor sump drain lines shall be routed so as not to obstruct any access covers or openings.

3.2.6.5 For rotary screw compressors handling condensing materials, the suction piping from the suction vessel to the compressor shall be heat traced and insulated to prevent liquid condensation in the piping. For oil flooded rotary screw compressors, the gas/oil separation vessels may also be heat traced and insulated. Vessels and piping covered by insulation shall be properly protected from corrosion.

3.2.6.6 A pressure relief device or devices shall be provided for each compressor stage of a rotary screw compressor. These relief devices may be located on either the liquid knockout vessels or the downstream discharge piping. Relief devices shall be located between the compressor discharge flange and any permanent blinds or block valves.

3.2.6.7 Pressure relief devices used for rotary screw compressors shall be sized and rated to avoid exceeding the lesser of piping pressure ratings, liquid knockout vessel pressure ratings, housing pressure ratings, rotor deflection criteria, or rotor bearing loads.

NOTE Though rotor deflection and bearing load are factors to be considered in the sizing and rating of rotary screw compressor pressure relief protection, installation of pressure relief protection does not, by itself, ensure compressor design limitations will not be exceeded.

3.2.6.8 Rotary screw compressors operating with variable suction and discharge pressure levels shall be evaluated for maximum expected discharge temperature. This evaluation shall be based upon the worst combination of gas composition, suction pressure, discharge pressure and flow rate expected during commissioning, start-up, shutdown or normal operation. Suitable controls shall be provided on the basis of this evaluation to avoid damage from excessive temperature.

NOTE For rotary screw compressors operating with variable suction and discharge pressure levels, maximum allowable discharge temperature can occur before maximum allowable pressure occurs despite discharge relief protection. The rotary screw compressor manufacturer can provide guidance in the selection and configuring of suitable safeguarding controls.

3.2.6.9 Rotary screw compressor piping shall meet the design criteria specified by the piping mechanical analysis, and static piping analysis.

3.2.6.10 Drains and vents from the rotary screw compressor and associated equipment shall be routed in accordance with API 619. Drain lines shall be routed so as not to obstruct any access covers or openings.

3.2.6.11 Rotary screw compressor, vessel and piping drains shall be manifolded into a single drain line to facilitate complete drainage through low points without disassembly of piping. Drain line primary block valves shall be provided at each vessel or liquid source. Additional drain valves shall be provided at the manifold. When a deck is provided, the manifold shall be located at grade near the edge of the decking.

3.3 Steam Turbines

3.3.1 Inlet piping to steam turbines shall be free of sections where liquid may accumulate during normal operation, start-up, and/or shutdown. Where such sections are unavoidable, suitable drain facilities shall be provided (see Figure B.2).

3.3.1.1 All sealing steam and leakoff steam lines connecting to the turbine must have any horizontal piping runs sloping away from the turbine and lower than the turbine connection.

3.3.1.2 All sealing steam and leakoff steam lines shall be designed and field fabricated to be self draining. Piping should slope away from the turbine so that any condensate will drain away from the turbine. Piping must not be pocketed unless the pocketed (low point) location is provided with both a manual and automatic drain.

3.3.2 Reducers installed in the inlet piping to steam turbines shall be eccentric with the flat side on the bottom to prevent the accumulation of any liquid.

3.3.3 Steam turbine gland leakoff lines shall be routed to headers as close as possible to the turbine. The transfer line shall be at least one pipe size larger than the connection furnished on the turbine.

3.3.4 An NPS 1 or larger bypass around the inlet block valve shall be provided to allow control during warm-up, carbon ring break-in, and overspeed trip tests. This bypass shall be sized to provide sufficient steam to run the turbine uncoupled from the driven load.

NOTE This bypass line is provided around the steam inlet block valve—**NOT** around the turbine trip or trip-throttle valve.

3.3.5 Piping arrangements for steam piping into the turbine shall include provision for the temporary reorientation of steam inlet lines for the precommissioning "blowing" of the line. Piping arrangements shall also include provision for the installation of targets if targets are to be utilized in the precommissioning "blowing" of the line.

3.3.6 The steam piping arrangement shall adequately support the remaining piping when piping is temporarily reoriented for precommissioning steam blowing of the line.

3.3.7 Condensing Turbines

3.3.7.1 Condensing steam turbines should be provided with a method for breaking vacuum or restoring turbine exhaust pressure to atmospheric pressure. Vacuum should be broken by allowing air into the condenser shell or into the exhaust piping downstream of the turbine. Vacuum MUST NOT be broken by allowing air to enter the turbine through casing drains, leakoffs, or sealing steam piping. The vacuum breaker may be as simple as a hand-operated valve that is opened when the turbine is shut down or it may be an automatic valved tied to the trip system. Breaking the vacuum serves two purposes. On applications where the driven equipment produces no load during coastdown, breaking vacuum will decelerate the equipment quicker. Secondly, breaking vacuum prevents that cold air is drawn in along the shaft when sealing steam is turned off. Sealing steam MUST NOT be turned off with the turbine exhaust under vacuum or the shaft may be bowed.

3.3.7.2 Condensing steam turbines equipped with valves that serve the dual function of a vacuum breaker and PSV often use a water seal to prevent air leakage through the valve into the condenser. Clean condensate should be supplied to maintain the water seal so that any leakage into the condenser does not cause contamination of the condensate being returned to the plant condensate collection system. The water seal level sight glass must be installed at a position that is easily visible to the operator.

3.3.7.3 Valves using a water seal to prevent air leaking into the vacuum system must be installed with its flanges level and its axis vertical to assure the water is equally distributed around the valve. If the valve is not level, the water seal may not be effective at preventing air leakage.

3.3.7.4 Atmospheric relief valves using a water seal to prevent air leaking into the vacuum system must not be allowed to accumulate excessive water seal levels, as this will cause an increase in the relief pressure. Water seal level must be controlled. This is best achieved by installing an unobstructed overflow pipe that automatically allows

excessive water seal height to be drained away. The overflow outlet must be visible and drain to an open atmospheric pressure sewer.

3.3.7.5 Condensing steam turbines and their condensers each will grow as temperature increases from the cold to the hot operating condition. The connection joining the turbine and condenser must therefore have a means of absorbing this thermal growth. An expansion joint may be used between the steam turbine and condenser. The expansion joint should be furnished with a flow liner and it should have the same construction rating as the turbine exhaust casing. The expansion joint must be able to absorb the thermal growth of the turbine and condenser up to the construction rating temperature. An alternative arrangement supports the condenser on spring supports. The condenser spring supports should be designed for the condenser operating weight with the hot well at its normal operating level and the water boxes and condenser tubes full of water. Condenser spring supports should be located symmetrically on either side of the turbine longitudinal axis producing minimal moments on the turbine exhaust nozzle.

3.3.7.6 All condenser piping connections must be provided with either expansion joints or piping with sufficient flexibility that condenser movement is not inhibited.

3.3.8 Turbine sealing steam piping and turbine packing cases downstream of sealing steam control valves must be protected from excessive pressure by a suitably sized pressure safety valve. The pressure safety valve should be sized for the maximum flow capacity of the sealing steam control valved. The pressure set point of the pressure safety valve must not be greater than the lowest turbine packing case construction rating or the sealing steam piping maximum allowable working pressure. A sealing steam supply pressure safety valve may not be required if all components to which the steam is delivered are capable of continuos operation at the maximum pressure and temperature of the sealing steam supply source.

3.3.9 The turbine casing must be protected from piping weight and piping expansion strains. Piping weight should be carried by suitable supports. Refer to NEMA standards SM 23 or SM 24 for a discussion of piping design in general and the method used to calculate the allowable maximum forces and moments the turbine flanges are designed to resist. Before piping is connected to the turbine, mount at least two indicators either from the turbine coupling hub reading on the driven machine coupling hub or vice versa. One indicator should be arranged to measure vertical movement, the other indicator should measure horizontal movement. Then connect piping to turbine. If the movement measured on either indicator exceeds 0.002 in. (0.05 mm), this indicates the piping loads are excessive and corrective action is necessary to reduce piping loads so the turbine support system and turbine casing are capable of working with the imposed loads without misalignment.

3.3.10 Drains are for intermittent operation during start-up (heating and draining) or shutdown (draining) and must always have valves installed.

3.3.11 Drains must be piped independently of one another to prevent flow from one drain at a higher pressure flowing into another drain at a lower pressure.

3.3.12 All steam piping connected to steam turbines, including inlet, exhaust, sealing steam, leakoff, etc., must be provided with adequate valved drains to allow draining the piping of condensate before starting and after shutting down.

3.3.13 See Annex C for additional information on steam turbine piping design.

4 Machinery Piping Installation

4.1 General Requirements

4.1.1 Piping shall not be connected to the machinery until grouting, machinery shaft preliminary alignment, and final field welding have been completed.

4.1.2 Unsupported piping shall not be installed on the machinery. Piping hangers and supports shall be installed as specified by design to minimize piping applied strain on the machinery. The casual addition or deletion of piping supports during field construction can result in piping stresses not anticipated by the piping designer and is prohibited.

4.1.3 Layout and installation of field run piping and conduit shall be jointly coordinated to provide operation and maintenance accessibility.

NOTE The intention is that the piping and electrical/instrumentation equipment installers will work together in the field routing of piping and conduit. The objective is a machinery installation where the piping and conduit do not block access for operation and maintenance.

4.1.4 Electrical power and instrumentation connections to machinery shall be made with conduit of sufficient length and flexibility to not interfere with machinery alignment.

NOTE As with piping, conduit to motors or instruments can impose strains on machinery. Since either flexible or rigid conduit may be used, the intent is to minimize conduit-imposed strain on the machinery. If rigid conduit is used, it may be necessary to measure conduit-imposed strains on the machinery in a manner similar to that performed for piping.

4.1.5 Suction and discharge piping for vertical in-line pumps shall have adjustable supports. These supports shall be located within 1 m (3 ft) of the pump's suction and discharge flanges. With pipe supports adjusted and all piping made up, the pump shall be in solid contact with the foundation mounting plate. The adjustable supports shall have a means of locking their positions to preclude change due to vibration or unwarranted casual adjustment.

4.1.6 Extreme care is to be exercised at all times to ensure that fluid passages of machinery are free from dirt, foreign objects, and other contamination.

4.1.7 Temporary blinds shall be installed at the machinery flanges to prevent dirt and debris from entering the machinery during installation.

4.1.8 All machinery threaded openings are to be plugged with a threaded pipe plug to prevent contamination. Plastic pipe plugs are unacceptable and shall not be used.

NOTE Plastic threaded pipe plugs are sometimes installed prior to painting the machinery. Once covered with paint, the plastic pipe plug becomes difficult to detect. When the equipment is put into service and subjected to process pressures and temperatures, the plastic pipe plug can "blow-out" releasing process liquid or gas to the environment in an uncontrolled manner. This may create a hazardous condition for operating personnel.

4.1.9 Any solid preservatives such as desiccant bags shall be removed from the machinery prior to connection of piping.

4.1.10 Duct tape and plastic shall not be used for covering the ends of pipe flanges as it is prone to tearing loose and lodging within the machine.

4.1.11 Pipe flange openings shall be kept covered during installation until the piping is connected to the process machinery.

NOTE Acceptable covers for protecting pipe flange openings include: a solid metal cover with rubber gasket, a solid plywood cover at least 12 mm ($^1/_2$ in.) thick or molded plastic flange covers expressly designed for this purpose. A solid metal cover with rubber gasket to cover flange openings during installation is preferred.

4.1.12 Rags and towels shall not be used to stuff into the open ends of pipe or flanges.

4.2 Field Installation of Auxiliaries

4.2.1 Field-installed auxiliary equipment, piping, conduit, instruments, coolers, seal pots, consoles, and so forth, shall be mounted separately from the machine and driver. These items shall not interfere with removal of the machine or driver nor with access to the machinery for normal operation and maintenance (see Figure B.1).

4.2.2 Auxiliary support piping, conduit, instrumentation, and so forth, shall be located for a single drop area on the machinery baseplate or soleplate. It is unacceptable to have piping, conduit, and other support systems installed at multiple locations on the base making maintenance and operation difficult.

4.2.3 Openings for branch connections of NPS 1 or smaller shall be made by drilling the run pipe. Torch cutting of any opening smaller than NPS 1 diameter is not acceptable.

4.2.4 Process-compatible pipe joint compounds approved by the designated machinery representative shall be used for all threaded connections. PTFE tape pipe sealant and/or anti-seize lubricants shall not be used to make up any threaded connections in lubricating oil, seal fluid, buffer gas, process, or utility connections to any machine.

NOTE Anti-seize lubricants are not a sealing compound and are not acceptable pipe joint compounds.

4.2.5 To ensure proper thread engagement, all threaded connections shall have two to five exposed pipe threads after making up the joint.

4.2.6 The diameter and field routing of pipe or tubing to and from seal pots shall be approved by the designated machinery representative (see API 682).

4.3 Hydrotest Restrictions

4.3.1 Piping hydrotest shall not be done through any type of machinery including vertical and horizontal pumps, steam turbines, blowers, or compressors. Separate hydrotest blinds shall be installed or the inlet and outlet piping spools shall be removed to isolate the machinery during piping hydrotest.

NOTE Piping hydrotest pressures are typically much greater than the normal operating pressures of the process machinery. Damage to process machinery components can result if machinery is subjected to hydrotest pressures. As it can be difficult to remove hydrotest water and debris from machinery internal passages, subsequent machine damage and process contamination can result when the equipment is put into service if machinery is hydrotested with the process piping.

4.3.2 The piping hydrotest layout around vertical barrel or can pumps shall be designed to prevent water from entering the pump barrel or can.

4.3.3 A copy of the piping and instrumentation drawings shall be created clearly indicating all of the piping hydrotest blinding locations. This blinding drawing shall be reviewed and approved by the designated machinery representative prior to the initiation of any hydrotesting.

4.3.4 Hydrotesting of the piping shall be performed after preliminary piping alignment and fit-up to the machinery. The equipment installer shall exercise care to prevent the draining of hydrotest liquids into the machinery.

NOTE Piping hydrotest may be required if piping welds are made to achieve piping alignment. However, hydrotest blinds and field welds can result in changes in piping-to-machinery alignment. The intention is that piping is preliminarily aligned to the machinery, major piping modifications made, and hydrotesting completed before final piping alignment checks are made with hydrotest blinds removed.

4.4 Stray Electrical Currents

NOTE Stray currents from welding or electrical heating stress relieving can cause damage to seals, bearings, and other machinery components. Stray electrical currents can also magnetize machinery components that can later generate damaging currents.

The following requirements in 4.4.1 through 4.4.4 shall be met for all field welds around machinery.

4.4.1 Welding ground cables shall be attached adjacent to the place where the weld is being made. The welding clamps shall be clamped onto the pipe near the weld and the welding machine properly grounded. Spring-type alligator clamps shall not be used.

NOTE A double ground cable located on each side of the weld within a distance of less than 30 cm (12 in.) is recommended.

4.4.2 Ground leads shall not be attached to any part of the machinery, auxiliary systems, or supports for any reason.

4.4.3 Should it be necessary to attach piping to the machinery for the purpose of field welding or electrical field stress relief of pipe strain, the machinery shall be isolated from the pipe flange by using a full-circle 3 mm ($^1/_8$ in.) thick composition gasket. Insulated bolts or studs shall then be installed. A continuity check shall then be performed to prove the electrical isolation of the machine from the piping. Be sure to replace the composition gaskets and insulated bolts, studs and/or nuts upon completion of welding, with components that meet the piping/process design.

NOTE The composition gasket is used to electrically insulate and protect the machinery from stray electrical currents.

4.4.4 Machinery magnetic flux density readings shall be measured and recorded before and after welding. If residual magnetism is in excess 0.2 millitesla (2 gauss), degaussing shall be required.

NOTE The intent is to prevent possible machinery bearing damage due to residual magnetism caused by stray electrical currents.

4.5 Design Verification

Prior to checking final piping alignment to the machinery the piping system shall be complete as follows in 4.5.1 through 4.5.7.

4.5.1 Pipe hydrotesting and drying out of the system shall be finished and all hydrotest blinds removed.

NOTE 1 Test blinds must be removed and major field welds completed before piping alignment checks are made, as hydrotest blinds and field welds can result in changes in piping-to-machinery alignment.

NOTE 2 Where possible, field welds required for piping alignment should be located between the isolation block valves and the machinery nozzles to permit the hydrotesting of short spools.

4.5.2 All permanent supports (fixed, sliding, spring supports, and hangers) shall be installed and adjusted.

4.5.3 All temporary supports and hangers shall be removed.

4.5.4 All the system piping components and machinery shall be at the same ambient temperature within a range of 10 °C (18 °F) before starting final piping alignment checks.

4.5.5 The piping engineering design inspector shall verify that the machine inlet and outlet piping is properly constructed in accordance with the piping design. This inspection shall include verification of gasket material, gasket size, the material, size, and length of flange bolts, studs, and nuts.

4.5.6 Before proceeding with piping alignment checks, the piping engineering design inspector shall verify that spring hangers and spring supports are installed with the preset spring hanger stops in position so that the springs are locked at the cold load setting. The piping engineering design inspector shall also verify that there are no visible gaps between the piping and fixed piping supports.

4.5.7 The machine shall be inspected to verify that it is still removable. This means that sufficient flanged and threaded piping connections exist to completely remove the machinery from the mounting plate for maintenance without requiring the cutting or welding of pipe or tubing.

4.6 Piping Alignment Requirements

4.6.1 Flanges of connecting piping shall not be sprung into position.

NOTE If the following criteria are met there is typically little difficulty in meeting shaft deflection requirements.

4.6.2 Pipe flange bolt holes shall be lined up with machinery nozzle bolt holes within 1.5 mm ($^{1}/_{16}$ in.) maximum offset from the center of the bolt hole to permit insertion of bolts without applying any external force to the piping.

NOTE The intent of this requirement is to ensure that flange bolts can be easily installed without the application of external force.

4.6.3 The machine and piping flange faces shall be parallel to less than 10 micrometers per centimeter (0.001 in. per in.) of pipe flange outer diameter up to a maximum of 750 micrometers (0.030 in.). For piping flange outer diameters smaller than 25 cm (10 in.), the flanges shall be parallel to 250 micrometers (0.010 in.) or less. For special-purpose machinery, pipe to machinery flange spacing measurements shall be recorded on the Piping alignment datasheet shown in Figure B.4. For raised face flanges, feeler gauge readings shall be taken at the raised face. For flat faced flanges, feeler gauge readings shall be taken at the flange outside diameter.

4.6.4 Flange face separation shall be within the gasket spacing ±1.5 mm ($^{1}/_{16}$ in.). Only one gasket per flanged connection shall be used.

4.7 Piping Alignment

The objective of the following requirements is to verify that strains imposed by the piping on the machinery are minimized. Less strain imposed on the machine casing results in less distortion of running clearances and better machine performance and reliability.

NOTE 1 The basic method of verifying pipe strain consists of bolting up the piping to the machine flanges while measuring the deflection of the machine shaft with dial indicators or laser tooling. This is done with spring hanger and spring support stops installed so that the springs are locked in the cold position to prevent spring function from masking shaft movement caused by piping-imposed strains. Excessive movement of the machine shaft as the piping is bolted up indicates that the pipe is imposing excessive strain on the machine. Spring hanger and spring support stops are then removed as a means of indicating any gross mismatch between the piping and the supports. Due to the weight of the liquid, caution is necessary when spring hanger or spring support stops are removed and the piping is liquid-full. The equipment installer should be aware of the design basis (empty or liquid-full) before removing spring hanger or spring support stops.

NOTE 2 For an overview of the piping alignment process refer to Annex D of this document, “Supplemental Tutorial—Field Relief of Pipe Strain.”

4.7.1 Machinery inlet and outlet piping systems shall be separately worked into position to bring the piping flanges into satisfactory alignment with the matching machinery flanges. Moving the machinery to achieve piping alignment is not acceptable and shall not be permitted.

4.7.2 Bringing the flanges of the pipe into alignment may be done by a number of means; however, all temporary supports for piping alignment (such as chain falls and wedges) shall be removed during final alignment readings and piping bolt-up. Piping shall be supported by permanent fixed and spring supports and hangers. Piping shall not be binding on pipe guides or restraints. If spring hanger or spring support stops are not installed, the spring hangers or spring supports shall be adjusted to the cold load settings and stops installed before proceeding with piping alignment checks.

NOTE 1 Methods for achieving piping alignment include shimming supports, adjusting spring hanger tie-rod turnbuckles, retorquing flanges, installing piping support spacers, selectively heating one side of the pipe (diamond heating), ring heating, cutting and rewelding, or completely refabricating the piping. The method or methods selected are determined by the piping configuration and materials and will be different for each installation.

NOTE 2 Spring hanger and spring support stops must be in place to ensure the piping system is rigid during the piping alignment check. This ensures that spring movements do not mask pipe strains. However, the equipment installer should exercise care that the stopped spring hanger or support is not used as a jack or chain hoist to force the piping into position. With spring stops in place and the load plate bound up against the coil side stop, it may be difficult to know the magnitude of load being applied.

4.7.3 Adjusting the spring tension of spring hangers or spring supports as a method of achieving piping alignment is not acceptable.

NOTE Spring hangers and spring supports are selected by the piping engineering designer to compensate for piping movements caused by pressure, thermal, and dynamic changes. Adjusting spring tension results in changes in the force exerted by the spring hanger or support. The spring hanger or support may no longer function as originally designed.

4.7.4 Piping movement shall be observed when spring hanger and support preset stops are removed back to the first fixed anchor point. If any spring hangers or supports are “topped-out” or “bottomed-out,” the piping design and spring hanger or support selection shall be verified by the piping engineering designer. Further pipe strain checks shall not be made until corrections are made to the piping system. Preset stops shall then be reinstalled in the spring hangers and supports to lock them into cold position.

NOTE In general, there typically is little movement of the piping when spring hanger and spring support stops are removed. The spring hangers and spring supports typically remain at their cold setting positions. Some upward movement may be expected on liquid lines. Larger liquid lines will usually move more than smaller lines. Refer to Figure B.8 for an overview of spring hanger and spring supports.

4.7.5 If flange alignment is to be accomplished by heating or welding of the piping, the procedure shall be approved for each type of pipe material in advance by a welding engineer or materials specialist.

4.7.6 Piping shall be disconnected from the machinery before selectively heating one side of the pipe as a method of achieving piping alignment.

NOTE 1 When diamond heating (selectively heating one side of the pipe in a diamond pattern) is used, the piping is free of the machine to allow it to move. If the piping is fixed to the machine and diamond heating is used, the piping may impose excessive strains on the machinery resulting in machine distortion or flange breakage.

NOTE 2 When ring heat (heating the piping in a circumferential band near the machinery) is used, the piping is attached to the machinery with a thermally insulating gasket. The intention with ring heat is to force the piping flange to conform to the machine flange. Typical industry practice is to apply this ring heat to the piping at a sufficient distance from the flanges that heat conduction through the insulating gasket is negligible. The direct application of heat to the machinery flange is prohibited due to the risk of damage to the internal components of the machine. There is no pipe size limitation on the use of ring heat. The magnitude of the piping misalignment to be corrected, the piping metallurgy, the pipe wall thickness, the location of pipe supports as well as piping flexibility are factors to be considered when making the decision to apply ring heat or alternative methods.

4.7.7 Pipe strain shall be measured while all piping connections are being made to the machine. This includes lube oil piping, cooling water piping, auxiliary piping such as steam, air, and flushing medium, as well as process piping and electrical conduits.

4.7.8 For pieces of machinery with common piping such as pairs of pumps, both shaft alignments shall be monitored during piping-up operations. Additionally, all of the machinery shall be bolted up at the same time with indicator readings taken on each shaft simultaneously.

4.8 Pipe Strain Measurement

4.8.1 An alignment bracket shall be installed on the coupling hub or shaft of the machine being checked for pipe strain.

4.8.2 Indicators shall be mounted on the coupling hub to measure vertical and horizontal movement on the opposite machine as the pipe flange bolts are being tightened using a torque wrench.

NOTE The use of laser alignment tooling to measure movement during pipe strain checks is an acceptable and often preferred alternative to dial indicators.

4.8.3 Bolt-up of the piping flanges to the machinery flanges shall proceed with the largest flanges first. Bolt-up must be completed in a continuous effort without disturbing the location of the dial indicators or laser alignment tooling.

4.8.4 Initial tightening of the flange bolts shall be snug (10 % of total torque). Flange bolts shall then be tightened to 30 % of total torque. The flange bolts shall then be tightened to 100 % of total final torque. Piping bolt torque values shall be specified by the piping engineering designer or the machinery manufacturer taking into account whether bolt threads are lubricated or non-lubricated.

4.8.5 The maximum shaft movement in either the vertical or horizontal directions after all the machinery flanges have been tightened shall be 50 micrometers (0.002 in.) or less. If the shaft movement is more than 50 micrometers (0.002 in.), the piping flanges shall be loosened from the machinery and corrections made to the piping or supports. All of the flange gaskets shall then be replaced and the procedure repeated. For special-purpose machinery shaft movement during piping bolt-up shall be recorded on the piping alignment datasheet shown in Figure B.4.

NOTE 1 Movement greater than 50 micrometers (0.002 in.) is permissible during the tightening procedure, provided that the final alignment tolerances are not exceeded.

NOTE 2 For some types of equipment (such as integrally geared compressors that have a relatively flexible casing) alternate methods such as dial indicators located on the machinery casing may be necessary to indicate piping alignment issues. The original equipment manufacturer (OEM) should be consulted in this regard.

4.8.6 For canned motor pumps bolted to a mounting plate, pipe strain shall be checked by monitoring deflection of the casing. Indicators shall be mounted to measure horizontal and vertical movement of the rear end cover and the casing of the pump relative to the mounting plate as the piping is being bolted up. Maximum allowable deflection is 125 micrometers (0.005 in.).

NOTE For non-typical installations where canned motor pumps are not bolted to mounting plates, an indicator bracket may be attached to one piping flange to measure the deflection of the other flange as flange bolts are tightened.

4.8.7 Reciprocating compressor piston rod runouts shall be measured before and after connection of process gas piping to the compressor cylinders and/or pulsation vessels and compared to the compressor manufacturer's allowable runouts or API 618, as applicable. Piston rod runouts exceeding allowable runouts are not acceptable, and the process gas piping shall be modified to reduce measured piston rod runouts.

4.9 Spring Hanger and Spring Support Function Check

4.9.1 After satisfactory piping alignment has been obtained, spring hanger and spring support function shall be verified. The piping shall be empty of all liquid and depressured prior to performing spring hanger and spring support function checks.

NOTE For an overview of the spring hanger function checking process refer to Figure B.8.

4.9.2 All spring hanger turnbuckle locknuts shall be verified as tight.

4.9.3 With dial indicators or laser alignment tooling on the coupling, movement of the machinery shaft shall be observed as the preset stops are removed to activate the spring hangers and spring supports.

4.9.4 All spring hanger and spring support load indicators shall be inspected to verify that the springs remained at their cold load setting. If spring hangers or spring supports are not at the cold load settings, they shall be adjusted to the cold load settings.

4.9.5 If there is movement at the machinery coupling, then machinery alignment shall be verified as being within the specified tolerances. These machinery alignment tolerances shall be specified by the designated machinery representative and may be different for different types of machinery.

4.9.6 If any of the spring hangers or spring supports are topped or bottomed out or if the machinery alignment is no longer within the specified tolerances, the piping design and spring hanger and spring support selection shall be verified by the piping engineering designer.

4.9.7 Spring hanger and spring support stops removed for function checks shall be chained or otherwise secured to the spring housing to prevent loss.

4.10 Oil Mist Piping Installation

4.10.1 All oil mist piping shall be routed and supported in the field with all joints exposed to view. No underground piping is acceptable.

4.10.2 Oil mist piping shall be fabricated to minimize the use of piping fittings. Reducing swage nipples and reducing couplings shall be used in place of reducing bushings.

4.10.3 No welded joints in the oil mist piping system are permitted.

4.10.4 Cut pipe or tubing shall be deburred or reamed so that there is no reduction of the inside diameter or any burrs at the pipe cut.

4.10.5 All piping joints shall be threaded. Threaded connections shall only be made with a thread lubricant/sealant approved by the designated machinery representative. PTFE tape shall not be used to make up any threaded connections in the oil mist system. Unless explicitly approved otherwise by the designated machinery representative, alternative pipe thread sealants shall not be used.

NOTE Oil mist application fittings (reclassifiers) contain small diameter orifices. Typical pipe thread sealants harden in service, forming particles. These particles migrate through the oil mist system and can plug oil mist application fittings (reclassifiers). Oil mist flow to the machinery bearings is then blocked and eventual bearing failure can result.

4.10.6 Each piece of pipe and all fittings shall be swabbed with a clean, lint-free, unused cloth or wiper prior to joining and threading connections. The equipment installer shall exercise care to keep the interior of all piping, tubing, and machinery clean.

4.10.7 Oil mist branch header to main header connections as well as drop point lateral to header connections shall be made at the top of the header pipe.

4.10.8 The oil mist application fittings (reclassifiers) shall be connected to the machinery bearing housings with the tubing arranged to allow normal operation and maintenance access without moving the application fitting (reclassifier) or the tubing.

4.10.9 Oil mist tubing shall be installed so that oil will not be trapped. Tubing benders shall be used for bending so that the tubing will have no kinks, wrinkles, or flattened spots.

4.10.10 Machinery that has previously been grease-lubricated shall have the grease fitting and vent passages cleaned before connection to the oil mist system.

4.10.11 Unless provided by the OEM, machinery bearing housings lubricated using purge mist shall have a permanent vent connection. The vent connection shall consist of stainless steel tubing 10 cm (4 in.) long attached to the top of the bearing housing and bent to point directly downward to serve as a vent. Alternative vent arrangements may be acceptable when approved by the designated machinery representative.

4.10.12 For machinery lubricated using purge mist and a constant level oiler or oil level sight assembly, the constant level oiler or oil sight level assembly shall be modified with an adjustable overflow device so that a rising oil level can overflow from the bearing housing. Modification of the oiler or oil level sight glass assembly to allow a rising oil level to drain from the oiler or sight glass assembly is acceptable when specified by the designated machinery representative.

NOTE On purge mist installations, constant level oilers provide the primary lubrication to the bearings. Mist oil that coalesces within the bearing can raise the oil level in the bearing housing. If bearing housing oil level is allowed to rise too high, bearing elements can overheat due to oil churning. Constant level oiler modifications may consist of the addition of a level overflow tube or by the drilling of a small hole in the side of the oiler cup located slightly above the normal oil level. The use of an overflow tube is preferred when the excess oil is to be collected to prevent oil from accumulating on the machinery baseplate.

4.10.13 For machinery lubricated using pure mist, an oil sight glass shall be installed in the bearing housing drain connection.

NOTE 1 The sight glass is typically a small, molded, clear plastic or glass device mounted at the bottom of the bearing housing to provide an indication of coalesced oil level and condition. An overflow connection is provided on top of the sight glass to drain excess oil from the bearing housing to insure a dry sump and provide a vent. When an oil collection system is provided this overflow connection is connected to a collection container located below the equipment.

NOTE 2 If a coalesced oil return system is used, alternative drain configurations may be required.

4.10.14 Machinery bearing housing oil mist connections shall remain plugged until all oil mist system commissioning is completed and the oil mist console is placed in operation.

4.11 Miscellaneous Requirements

4.11.1 After final piping bolt-up, final shaft alignment shall be verified and all machinery shall be hand rotated to ensure that neither binding nor case distortion has occurred during piping installation. Piping spring hanger and spring support stops shall be installed during final shaft alignment checks.

4.11.2 All spring hanger turnbuckle locknuts shall be verified as tight.

4.11.3 The piping installation checklist (see Annex A) shall be completed by the equipment installer and forwarded to the equipment user as specified.

4.11.4 The machinery piping installation diagrams in Annex B should be utilized by the piping designer and equipment installer as specified.

4.11.5 For steam piping installations, Annex C should be utilized by the piping designer and equipment installer as specified.

4.11.6 Annex D is recommended for field relief of pipe strain for proper piping alignment.

Annex A
(normative)

Machinery Piping Installation Checklist

Section	Requirements	Name	Date
4.1	**General Requirements**		
4.1.1	Grouting, preliminary shaft alignment and field welding completed?		
4.1.2	Piping hangers and supports installed per design to avoid applying strain on the machinery?		
4.1.3	Layout and installation of piping and conduit jointly coordinated?		
4.1.4	Electrical power and instrumentation connections to machinery made with conduit sufficiently flexible?		
4.1.5	Does suction and discharge piping for vertical in-line pumps have adjustable supports located within 1 m (3 ft) of the pump's suction and discharge flanges?		
	Is the pump in solid contact with the foundation mounting plate?		
	Are adjustable supports locked in position?		
4.1.7	Temporary blinds installed at the machinery flanges to prevent dirt and debris from entering the machinery?		
4.1.8	All threaded openings plugged with a threaded pipe plug to prevent contamination?		
	No plastic pipe plugs used to plug openings?		
4.1.9	Any solid preservatives such as desiccant bags removed prior to connection of piping?		
4.1.10	No duct tape or plastic used for covering pipe flange ends?		
4.1.11	Pipe flange openings kept covered during installation?		
4.1.12	Rags and towels not used to stuff into the open ends of pipe or flanges?		
4.2	**Field Installation of Auxiliaries**		
4.2.1	All auxiliary equipment, piping, conduit, instruments, coolers, seal pots, consoles, and so forth mounted separately from the machine and driver?		
	These items do not interfere with removal of the machine or driver nor with access to the machinery for normal operation and maintenance?		
4.2.2	Auxiliary support piping, conduit, instrumentation and so forth located for a single drop area on the machinery baseplate or soleplate?		
4.2.3	Openings for branch connections of NPS 1 or smaller made by drilling the run pipe?		
4.2.5	All threaded connections have two to five exposed pipe threads after making up the joint?		
4.2.6	The diameter and field routing of pipe or tubing to and from seal pots approved by the designated machinery representative?		

Section	Requirements	Name	Date
4.3	**Hydrotest Restrictions**		
4.3.1	Machinery isolated for hydrotesting of piping?		
4.3.3	A copy of the piping and instrumentation drawings indicating all the piping Hydrotest blinding locations reviewed and approved by the user-designated representative prior to hydrotesting?		
4.3.4	Machinery piping alignment and fit-up completed?		
4.4	**Stray Electrical Currents**		
4.4.1	A double ground cable located on each side of the weld within a distance of less than 30 cm (12 in.) installed?		
	The welding clamps clamped onto the pipe and welding machine grounded?		
4.4.2	Ground leads not attached to any part of the machinery, auxiliary systems, or supports?		
4.4.3	Machinery isolated from the pipe flange by using a full-circle 3 mm ($^1/_8$ in.) thick composition gasket with insulated bolts or studs?		
	Continuity check performed to prove the electrical isolation of the machine from the piping?		
4.4.4	Magnetic flux density measured and recorded before and after welding?		
4.5	**Design Verification**		
4.5.1	Pipe hydrotesting and drying out of the system finished and all hydrotest blinds removed?		
4.5.2	All permanent supports and hangers installed and adjusted?		
4.5.3	All temporary supports and hangers removed?		
4.5.4	All the system piping components and machinery at the same ambient temperature within a range of 10 °C (18 °F) before starting final piping alignment checks?		
4.5.5	The piping engineering design inspector verifies that the machine inlet and outlet piping is properly constructed in accordance with the piping and instrumentation drawings?		
4.5.6	The piping engineering design inspector verifies that spring hangers are installed with the preset spring hanger stops in position such that the springs are locked at the cold load setting before proceeding with piping alignment checks?		
	The piping engineering design inspector verifies that there are no visible gaps between the piping and fixed piping supports?		
4.5.7	The machine inspected to verify that it is still removable?		
4.6	**Piping Alignment Requirements**		
4.6.1	Flanges of connecting piping not sprung into position?		
4.6.2	Pipe flange bolt holes lined up with machinery nozzle bolt holes within 1.5 mm ($^1/_{16}$ in.) maximum offset from bolt hole center?		

Section	Requirements	Name	Date
4.6.3	The machine and piping flange faces parallel to less than 10 micrometers per cm (0.001 in. per in.) of pipe flange outer diameter up to a maximum of 750 micrometers (0.030 in.)?		
	If piping flange outer diameters are smaller than 25 cm (10 in.), are the flanges parallel to 250 micrometers (0.010 in.) or less?		
	Piping alignment datasheet (see Figure B.4) completed?		
4.6.4	Flange face separation within the gasket spacing ±1.5 mm ($^{1}/_{16}$ in.)?		
4.7	**Piping Alignment**		
4.7.2	Have all temporary supports for piping alignment (such as chain falls and wedges) been removed for final alignment readings and piping bolt-up?		
	Piping supported by permanent fixed and spring supports and hangers?		
	Piping not binding on pipe guides or restraints?		
4.7.4	No spring hangers or supports “topped-out” or “bottomed-out” when stops are removed?		
	Stops reinstalled as preparation for final pipe strain check?		
4.7.5	Heating procedure approved in advance by welding engineer or materials specialist?		
4.8	**Pipe Strain Measurement**		
4.8.2	Indicators or laser tooling mounted on the coupling hub to measure vertical and horizontal movement on the opposite machine as the pipe flange bolts are being tightened using a torque wrench?		
4.8.4	Initial tightening of the flange bolts snug (10 % of total torque)?		
	Flange bolts then tightened to 30 % total torque?		
	Flange bolts then tightened to 100 % of total flange torque?		
	Total Bolt Torque:		
	Lubricated Threads?		
	Non-lubricated Threads?		
4.8.5	The maximum shaft movement in either the vertical or horizontal directions after all the flanges are tightened is 50 micrometers (0.002 in.) or less?		
	Machine shaft total vertical movement:		
	Machine shaft total horizontal movement:		
	Final piping alignment measurements recorded on the piping alignment datasheet, Figure B.4?		
4.9	**Spring Hanger and Spring Support Function Check**		
4.9.1	Spring hanger and spring support function verified as acceptable (no springs or spring supports topped out or bottomed out and machinery shaft alignment within the specified tolerances)?		

Section	Requirements	Name	Date
4.9.2	All spring hanger turnbuckle lock nuts verified as tight?		
4.9.3	Spring hanger and spring support preset stops removed while observing dial indicators or laser tooling on the machinery coupling?		
4.9.4	All spring hanger and support load indicators at cold load settings?		
4.9.7	Spring hanger and support stops chained or otherwise secured to the spring can to prevent loss?		
4.10	**Oil Mist Piping Installation**		
4.10.1	All oil mist piping joints exposed to view?		
4.10.2	Reducing swage nipples and reducing couplings used in place of reducing bushings?		
4.10.3	No welded joints in the oil mist piping system?		
4.10.4	Cut pipe or tubing deburred or reamed so that there is no reduction of the inside diameter or any burrs at the pipe cut?		
4.10.5	All piping joints threaded?		
	Threaded connections only made with thread lubricant/sealant?		
	PTFE tape not used?		
4.10.6	Each piece of pie and all fittings swabbed with a clean, lint-free, unused cloth or wiper prior to joining and threading connections?		
4.10.7	Oil mist branch header to main header connections as well as drop point lateral to header connections made at the top of the header pipe?		
4.10.8	The oil mist application fittings (reclassifiers) connected to the machinery bearing housings with the tubing arranged to allow normal operation and maintenance access without moving the application fitting (reclassifier) or the tubing?		
4.10.9	Oil mist tubing installed such that no oil will be trapped?		
	Tubing benders used for bending such that the tubing will have no kinks, wrinkles, or flattened spots?		
4.10.10	Machinery that has previously been grease-lubricated has the grease fitting and vent passages cleaned before connection to the oil mist system is made?		
4.10.11	Machinery bearing housings lubricated using purge mist have permanent vent connections?		
4.10.12	Constant level oiler or sight glass assembly modified so that a rising oil level can overflow for machinery lubricated using purge mist?		
4.10.13	Oil sight glass installed in the bearing housing drain connection for machinery lubricated using pure mist?		

Section	Requirements	Name	Date
4.11	**Miscellaneous Requirements**		
4.11.1	Final shaft alignment verified after final piping bolt-up?		
	Machinery shaft hand rotated to ensure that neither binding nor case distortion has occurred?		
4.11.2	Spring hanger turnbuckle locknuts tight?		
4.11.3	This piping installation checklist forwarded as specified?		
Piping Inspector:		**Date:**	

Annex B
(informative)

Machinery Installation Piping Diagrams

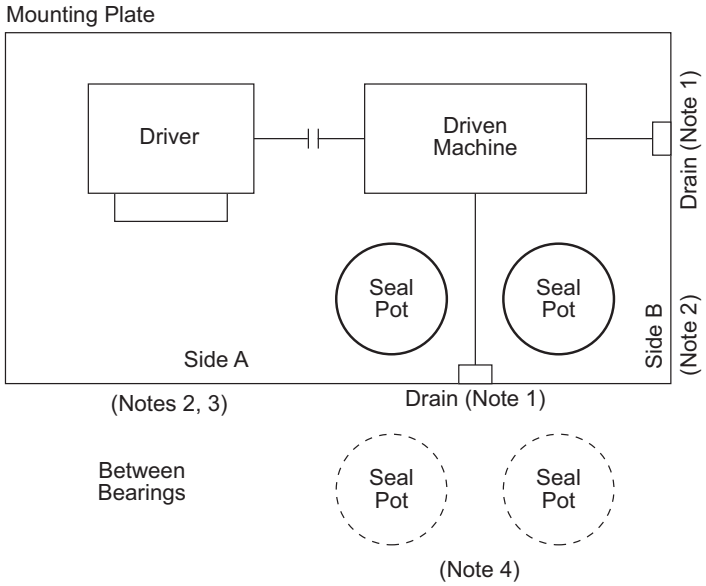

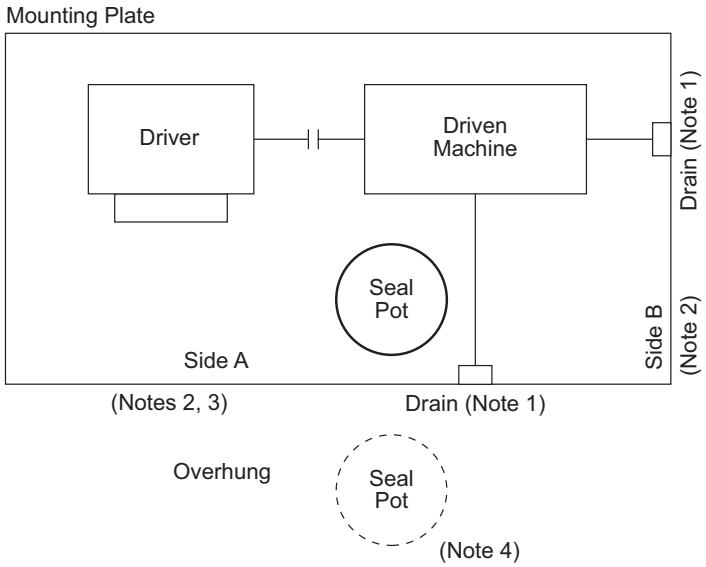

NOTE 1 Drain located at Side A or Side B.
NOTE 2 All tubing and auxiliary piping routed to Side A or Side B.
NOTE 3 Electrical connections made on Side A.
NOTE 4 When specified, alternate seal pot locations alongside mounting plate are acceptable.
NOTE 5 Verify that seal pot location and orientation does not conflict with shaft rotation and seal porting.

Figure B.1—Typical Seal Pot Location

Machinery Installation—Piping

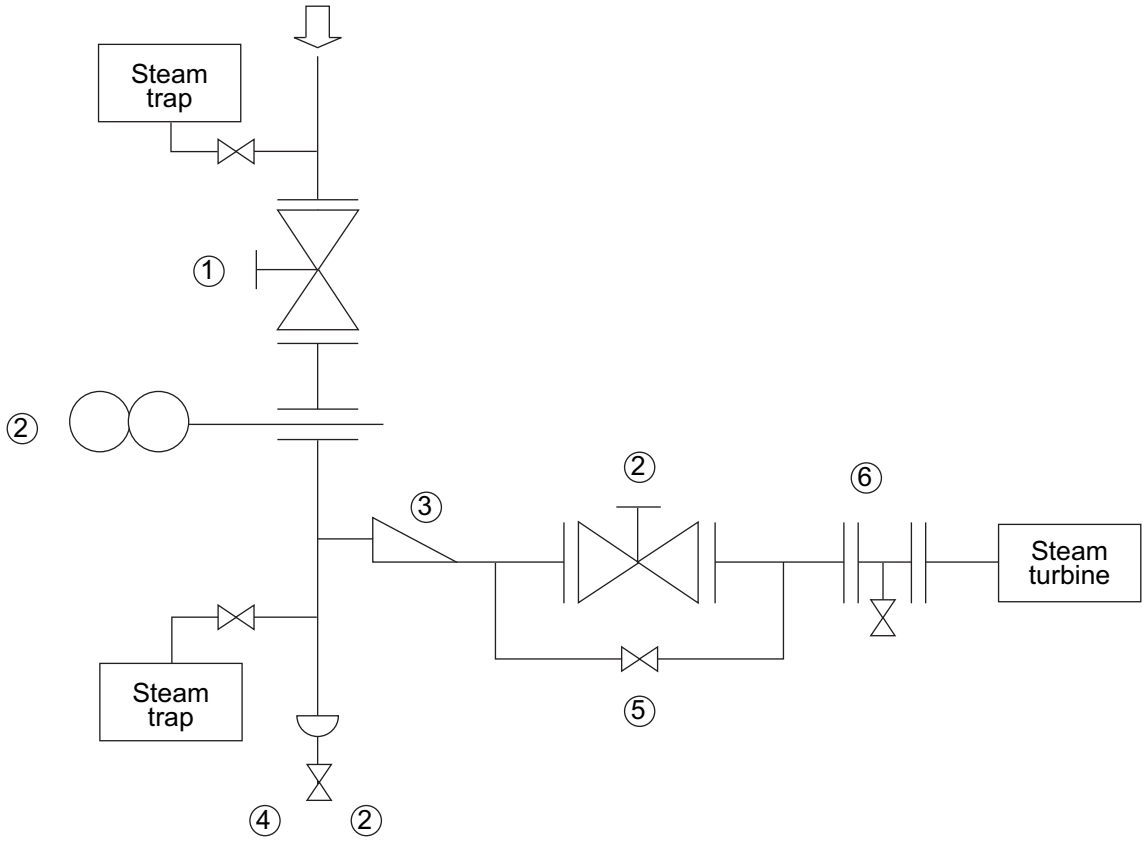

1 Isolation block valves required (2.3.1). Accessible from Grade (2.2.4)
2 Blinds or “Double block and bleed” suggested (2.3.2).
3 Eccentric reducer flat-on-bottom (3.3.2)
4 Suitable drain facilities for condensate (3.3.1)
5 Warm-up bypass valve (3.3.4)
6 Provision for pre-commissioning blowing of steam line (3.3.5)

Figure B.2—Typical Steam Turbine Inlet Piping

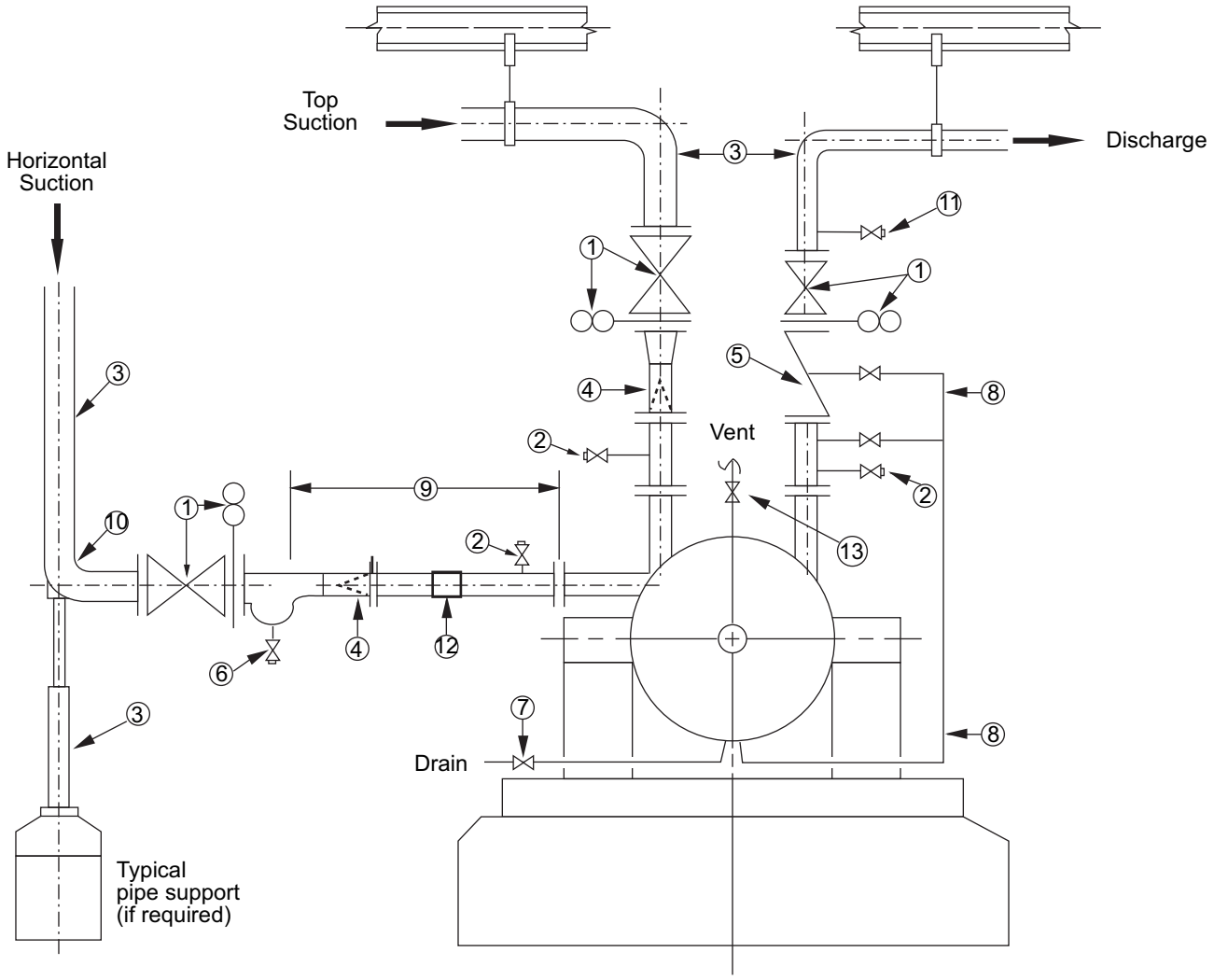

1 Isolation block valves required (2.3), Blinds shall be provided (2.3), block valves and blinds accessible from grade (2.2.4).
2 Pressure measurement connections with isolation valves (2.6.1 and 2.6.2).
3 Piping to and from machinery shall be adequately supported (2.4).
4 Inlet strainer required (2.8).
5 Discharge check valve required for centrifugal or rotary pumps, compressors, or blowers (2.9.1). Same size as outlet nozzel (2.9.3).
6 Vent and drain piping NPS 3/4 or larger (2.10.1).
7 Piping vents and drains not located in angle section of reducer (2.10.2). Located in a convenient location (2.10.3). Drains routed to edge of baseplate (2.10.3).
8 Warm-up lines for hot materials (2.11).
9 Pump suction line straight run requirement (3.1.2.6).
10 Last pipe elbow to be long radius (3.1.2.8).
11 Bypass or drain valve for check valves in vertical piping (2.9.4).
12 Provision for field weld (2.5).
13 Pump vent or equalizing line (3.1.2.10).

Figure B.3—Typical Machinery Piping Schematics

Machinery Installer: _____ Machinery Identification: _____

Feeler Gauge Readings Between
Gasket Faces

Flange Size: _____

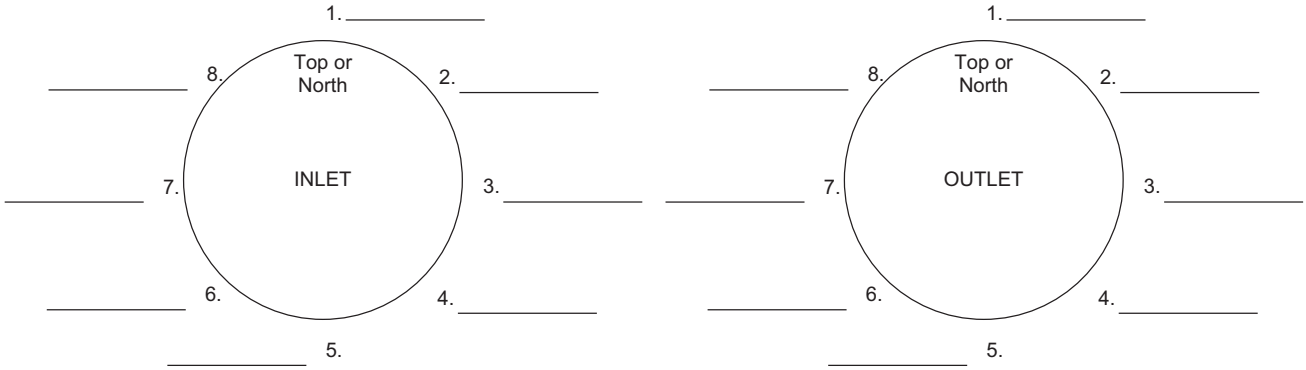

Maximum Allowable Tolerances: (difference between high & low readings)

- 10 Micrometers/centimeter (0.001 in./in.) of flange outside diameter, not to exceed 750 micrometers (0.030 in.).
- Piping smaller than NPS 10: 250 micrometers (0.010 in.) or less.
- Only 4 feeler gauge readings, equally spaced, required on flanges 15 centimeters (6 in.) outside diameter and smaller.

Note:

Pipe Strain Readings

- For horizontal machinery - Dial indicator or laser readings on coupling hub flange.
- For vertical machinery - Dial indicator or laser readings on driver-mount flange.

Net Indicator Readings	Inlet Flange Bolt Up	Outlet Flange Bolt Up
Horizontal Orientation (1)	+ or – _____ µm or in.	+ or – _____ µm or in.
Vertical Orientation (2)	+ or – _____ µm or in.	+ or – _____ µm or in.

(1) For vertical machinery, the horizontal orientation is perpendicular to pipe centerline when viewed from top.

(2) For vertical machinery, the vertical orientation is parallel to pipe centerline when viewed from top.

(3) Maximum shaft movement in either direction is 50 micrometers (0.002 in.)

Remarks: _____

_____

Piping Inspector: _____ **Date:** _____

Figure B.4—Piping Alignment Datasheet

2.5.1 For all piping NPS 10 or larger, the piping engineering designer shall include provisions for a final piping field weld to facilitate piping installation in accordance with the machinery flange fit-up requirements.

2.5.2 The final piping field weld shall be located between the face of the machinery flange and the first pipe support or isolation block valve.

NOTES

Piping smaller than NPS 10 typically has sufficient flexibility that there is usually little difficulty in achieving machinery flange fit-up requirements during field installation. Thick walled pipe smaller than NPS 10 may require a final field weld due to the greater stiffness and difficulty in meeting flange fit-up requirements. Typical industry practice is to shop fabricate piping smaller than NPS 10 and not perform a final field weld providing flange fit-up requirements can be met.

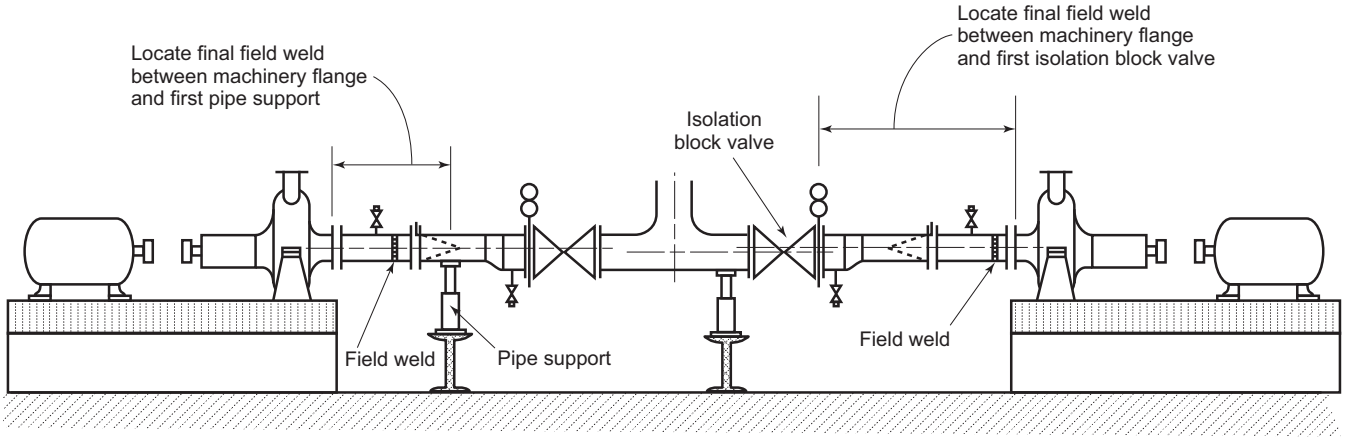

Figure B.5—Final Field Weld Location

INLET STRAINERS

2.8.2.7 Acceptable temporary strainer designs include: conical, truncated conical, and T-type or similar design.

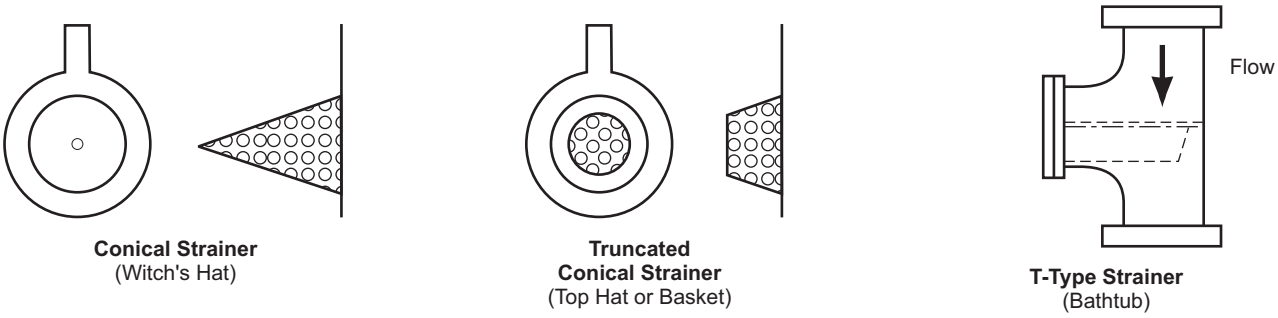

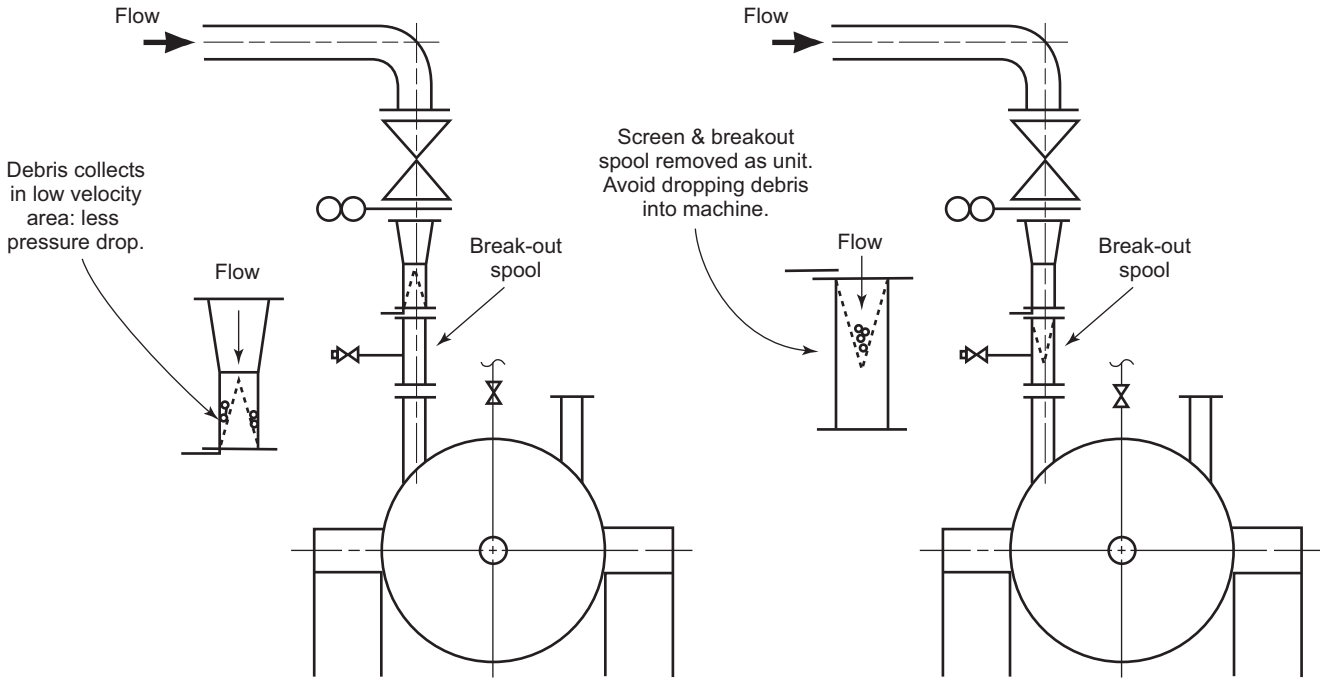

2.8.2.8 The point of the conical strainer shall face upstream in the piping. Screens in T-type strainers shall point with the flow.

NOTE Pointing the conical strainer upstream to the flow allows debris to fall to the outside of the cone around the perimeter of the pipe and so minimize the obstruction to the flow path. This is the preferred orientation for most machinery installations. Conical strainers may be installed with the point oriented downstream when explicitly specified by the designated machinery representative. This may be advantageous in situations where there are space limitations or where removal of the temporary strainer may result in the dropping of debris into the machine inlet.

Figure B.6—Inlet Strainers

2.16.1 Oil mist main and branch headers shall not be valved.

2.16.13 Oil mist drop point lateral piping shall come vertically off the top of the main header through a screwed tee.

2.16.21 Oil mist drop point distribution blocks shall be equipped with a valve to permit the draining of oil. Distribution block drain valves shall be snap acting, petcock, or other type that cannot open when subject to vibration.

2.16.17 Oil mist drop point piping shall be located such that access for operation and maintenance of the machinery is not obstructed. Dismantling of oil mist drop point piping or the distribution block to remove the machinery for maintenance is not acceptable.

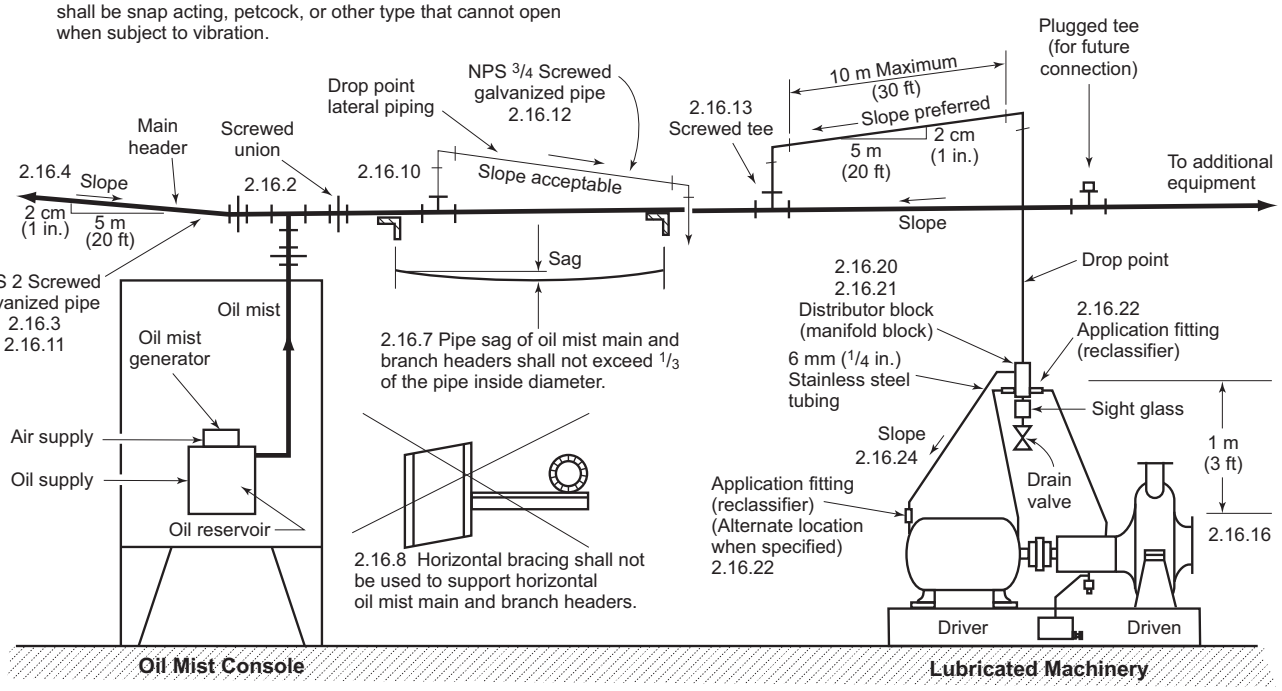

Figure B.7—Oil Mist Piping

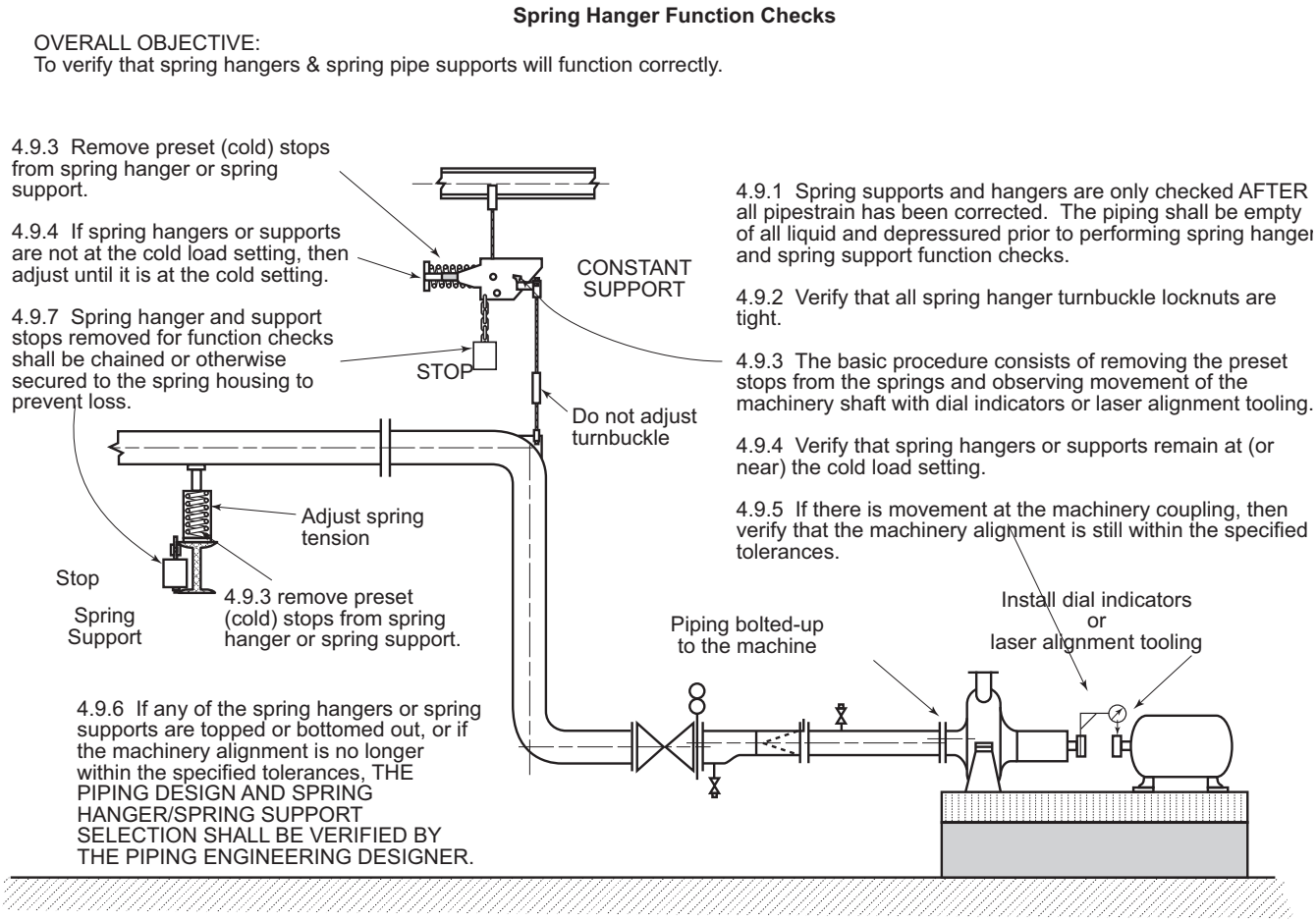

Figure B.8—Spring Hanger Function Checks

Single Drop Area for Auxiliary Piping & Conduit

2.2.3 Auxiliary support piping, conduit, instrumentation, and so forth, shall be designed for a single drop area on baseplate mounted machinery.

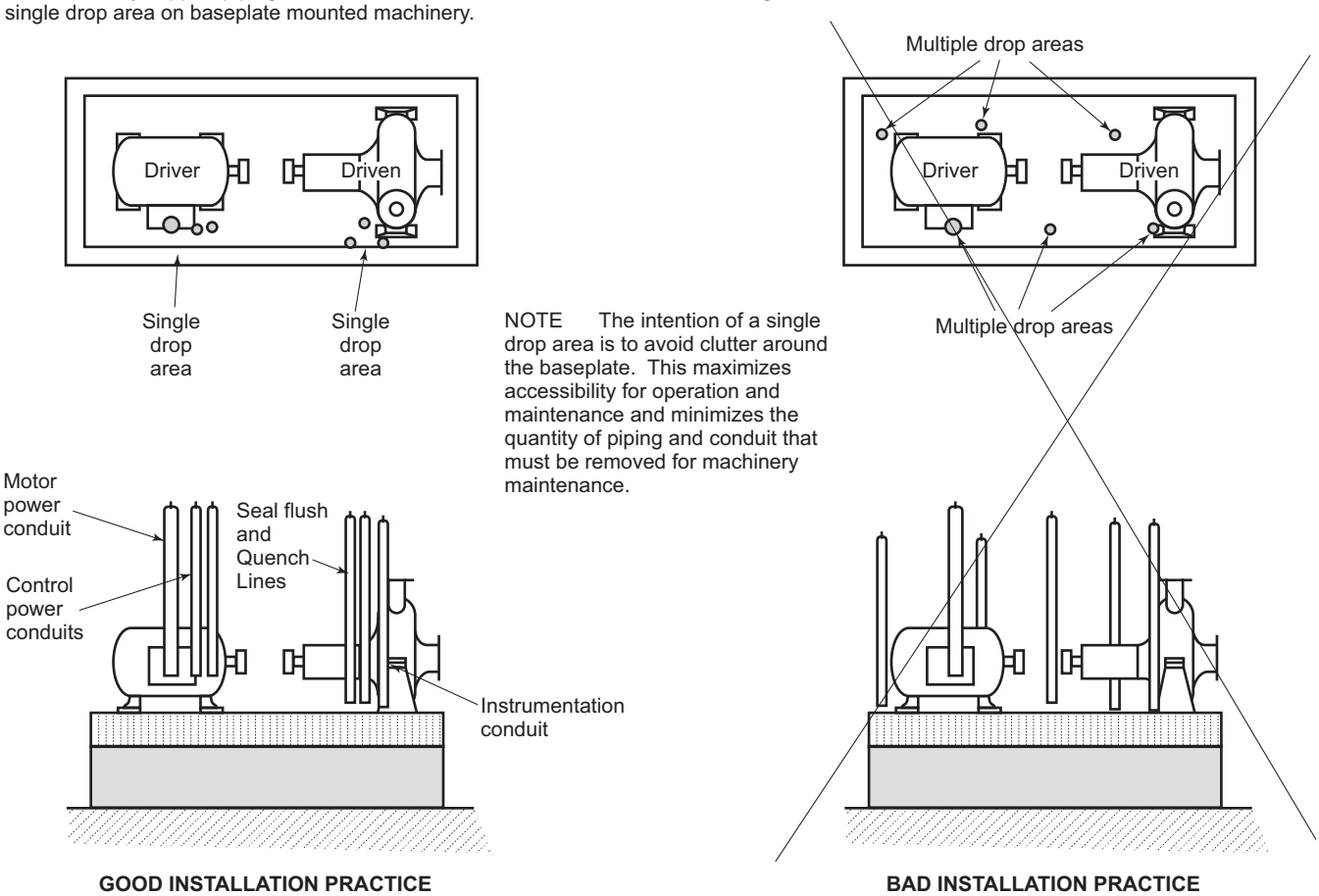

NOTE The intention of a single drop area is to avoid clutter around the baseplate. This maximizes accessibility for operation and maintenance and minimizes the quantity of piping and conduit that must be removed for machinery maintenance.

Figure B.9—Single Drop Area for Auxiliary Piping and Conduit

Suction Line Slope & Reducers

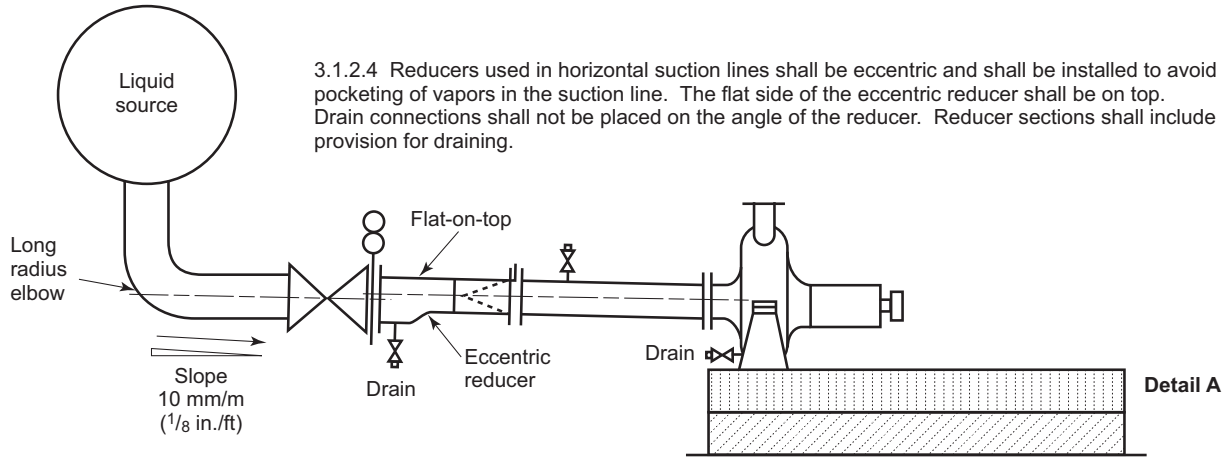

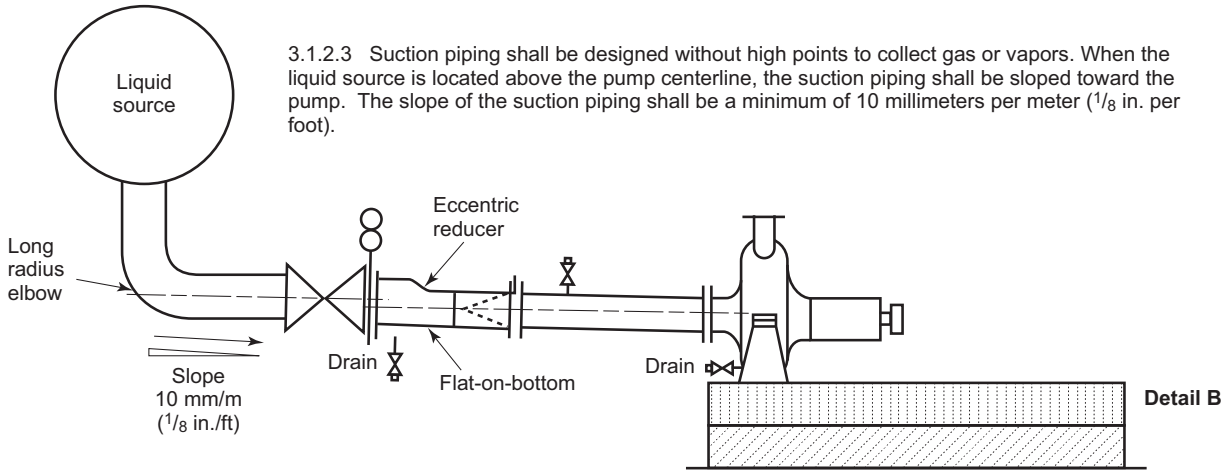

3.1.2.4 Note 2: When the piping must be completely drained to remove hazardous liquid or solids before performing maintenance, the eccentric reducer in the horizontal pump suction line may be oriented with the flat side on the bottom. For example, it is desirable that hydroflouric acid piping be completely drained to avoid pockets of material that may prove hazardous to maintenance personnel.

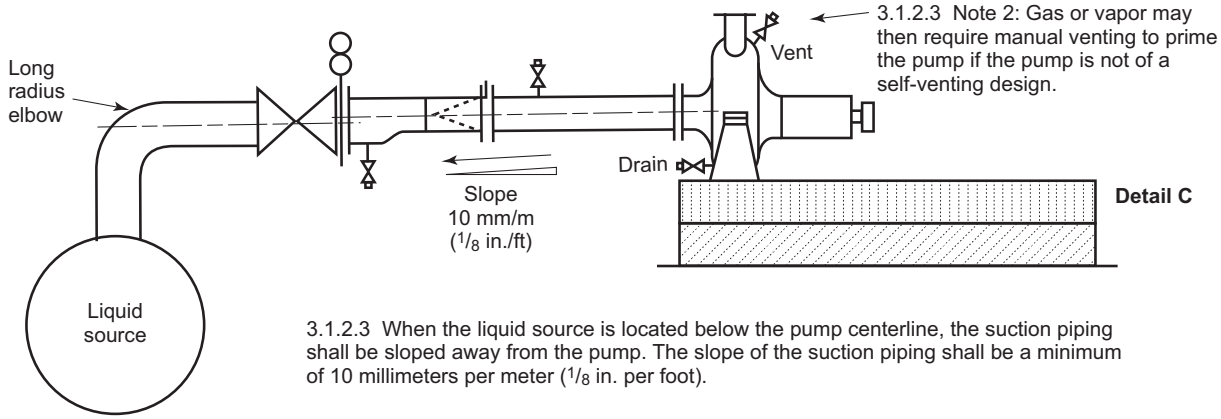

Figure B.10—Suction Line Slope and Reducers

Annex C
(informative)

Steam Piping for Turbines

The inlet and exhaust piping (including feedwater heating connections) for a steam turbine may have a marked effect on the satisfactory operation of the turbine and driven machine. Due to the close internal clearance, it is not advisable to have excessive forces that may cause defection of the turbine case and supports and reduce internal clearances below a safe limit or result in excessive coupling misalignment; coupling alignment must be maintained within close limits for satisfactory operation. Small lightweight high-speed turbines are especially susceptible to casing distortion. For these reasons the steam piping should be analyzed and properly laid out to prevent excessive forces from being transmitted to the turbine flanges.

Piping may exert forces from three basic causes: the dead weight, thermal expansion, and thrust due to expansion joints. Since thermal expansion also causes movement of the turbine flanges, this must be considered a cause of pipe reaction. Because of the many locations of inlet and exhaust flanges and probable piping arrangements, it is not possible to present a piping arrangement to cover all cases. The purpose of this annex is to cover some of the basic principles of piping, particularly as applied to turbines. Piping design is covered quite thoroughly by manuals put out by the major piping fabricators and contractors, and it is not the intention of this annex to duplicate what may be found in these manuals.

Piping to the turbine flanges comes under the jurisdiction of the ASME *Boiler and Pressure Vessel Code*, the ASA *Code for Pressure Piping*, or the American Bureau of Shipping. The applicable code will determine the size and type of pipe used and will not be discussed in this annex.

C.1 Exhaust Piping

Low-pressure and vacuum lines are usually large and relatively stiff. It is common practice to use an expansion joint in these lines to provide flexibility. If an expansion joint is improperly used, it may cause a pipe reaction greater than the one it is supposed to eliminate. An expansion joint will cause an axial thrust equal to the area of the largest corrugation times the internal pressure. The force necessary to compress or elongate an expansion joint can be quite large, and either of these forces may be greater than the limits for the exhaust flange. In order to have the lowest reaction, it is best to avoid absorbing pipe line expansion by axial compression or elongation. If it is found that expansion joints are required it is essential that they be properly located and their function determined.

Figure C.1 shows an expansion joint in a pressure line. The axial thrust from the expansion joint tends to separate the turbine and the elbow. To prevent this, the elbow must have an anchor to keep it from moving. The turbine must also absorb this thrust and in doing so becomes an anchor. This force on the turbine case may be greater than can be allowed. In general this method should be discouraged.

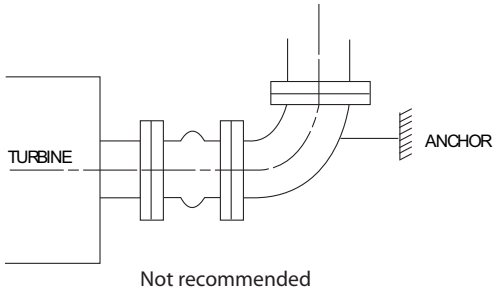

Figure C.1

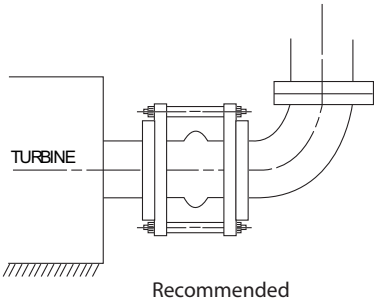

Figure C.2

Figure C.2 shows the same piping arrangement as Figure C.1 except for the addition of tie rods on the expansion joint. The tie rods limit the elongation of the joint and take the axial thrust created by the internal pressure so it is not transmitted to the turbine flange. The tie rods eliminate any axial flexibility, but the joint is still flexible in shear, that is, the flanges may move in parallel planes. The location of this type of joint in the piping should be such that movement of the pipe puts the expansion joint in shear instead of tension or compression.

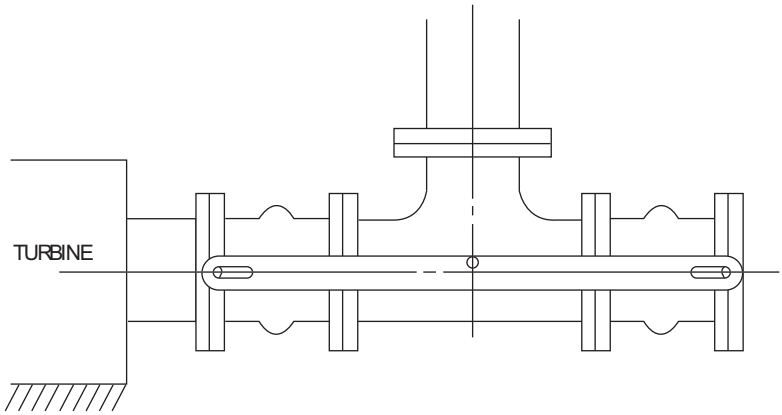

Figure C.3—Exhaust Piping Expansion Joint Application Utilizing Tie Rods

Figure C.3 is an arrangement frequently used, having tie rods as indicated. This arrangement will prevent any thrust due to internal pressure from being transmitted to the exhaust flange and retains the axial flexibility of the joint. It may be used for either vacuum or pressure service.

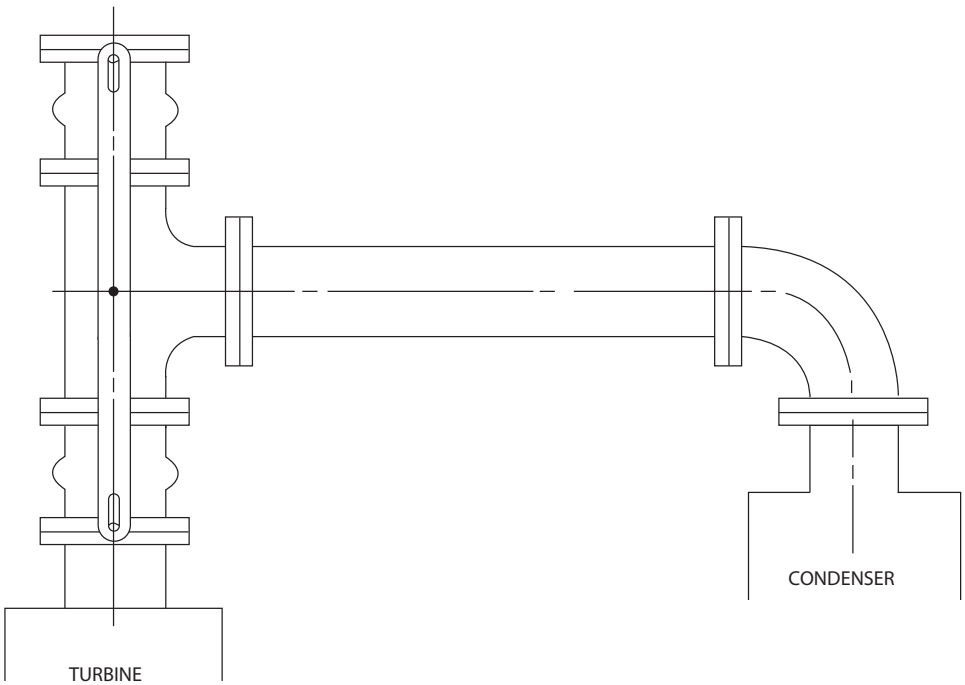

Figure C.4—Condensing Turbine Expansion Joint with "UP" Exhaust

Figure C.4 shows a suggested arrangement for a condensing turbine with an up exhaust. This arrangement is recommended and frequently used. Due to the large exhaust pipe size normally encountered on condensing turbines, the exhaust piping will be relatively stiff, and an expansion joint must be used at some point to take care of thermal expansion. An unrestricted expansion joint placed at the exhaust flange of the turbine will exert an upward or lifting force on the turbine flange, which in many cases is excessive. Figure C.4 provides the necessary flexibility to take care of thermal expansion without imposing a lifting force on the turbine. The expansion joint is in shear, which is the preferred use. The relatively small vertical expansion will compress one joint and elongate the other, which causes a small reaction only and will be well within the turbine flange limits.

On smaller and high-pressure exhaust lines it is frequently better to rely on the flexibility of the piping than on an expansion joint. Only after a careful analysis of the piping shows the need for an expansion joint should they be used.

In order to have flexibility in piping, short direct runs must be avoided. By arranging the piping in more than one plane, torsional flexibility may be effectively used to decrease the force.

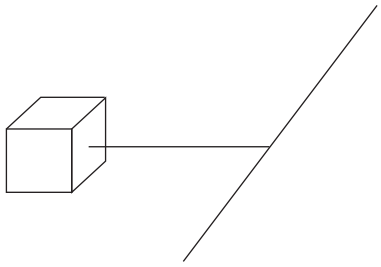

Figure C.5

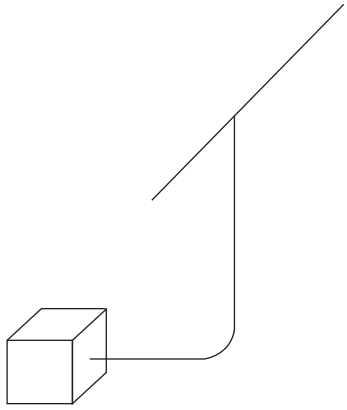

Figure C.6

Figure C.5 shows a short direct run to an exhaust header. If the header is free to float in a horizational plane, thermal expansion of the exhaust line will put very little direct thrust on the exhaust flange. If the header is fixed, the thermal expansion will tend to cause either the turbine or header to move and may cause damage. If thermal expansion causes the header to move in an axial direction, it will transmit a force and moment to the exhaust flange. Figure C.5 is not recommended, as it is difficult to prevent excessive forces from being transmitted to the exhaust flange. Figure C.6 is a variation of Figure C.5 and the same comments apply.

Figure C.7, through Figure C.9 show piping arrangements in 1, 2, and 3 planes where long runs of pipe are used to get flexibility. The length of the runs necessary for flexibility depends on the size and schedule of the pipe. In these cases it is assumed that the turbine is a fixed point and the point of connection to the header “A” is fixed. If “A” is free to move, it may relieve some of the forces caused by thermal expansion. If “A” is free and thermal expansion of the header causes it to move, it may cause additional forces to be transmitted to the turbine. With existing piping installations or new piping systems, it is necessary to examine the entire system and locate the fixed points from which deflection and movements may be measured. Guides, tie rods, and stops should be used to limit movements where necessary, to prevent excessive piping movement from creating forces and moments that exceed the turbine flange limits.

C.2 Steam Inlet Piping

The forces on the steam inlet flange are normally due to thermal expansion. Expansion joints are seldom used due to the high pressures encountered; therefore, utilizing the pipe flexibility is the only means of keeping the forces below

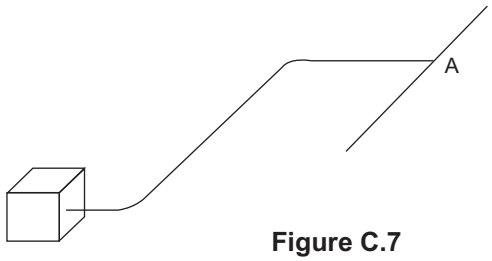

Figure C.7

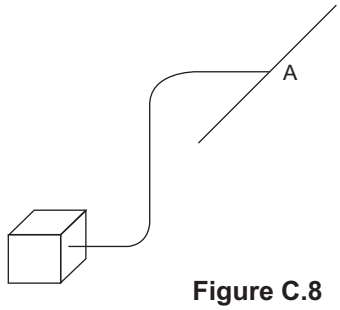

Figure C.8

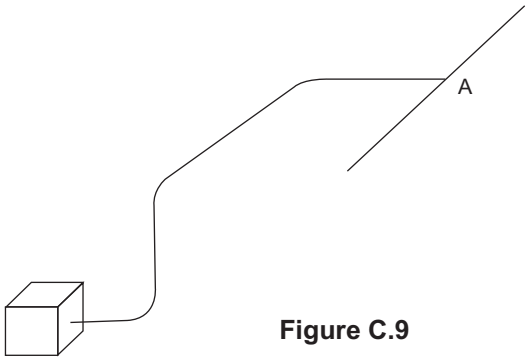

Figure C.9

the specified limits. Figure C.7 through Figure C.9 apply to inlet piping as well as exhaust lines, except that the take-off from a steam header should be on the top.

Figure C.10 shows the recommended method of taking a steam line from a header. Since any steam line, even with superheated steam, may have entrained moisture or condensate running along the bottom of the pipe due to radiation losses, boiler priming, or ineffective trapping, taking steam off the top of the header assures dry steam under normal conditions.

If a steam inlet line is at the end of a steam header, it should be taken off as shown in Figure C.11. Since any accumulation of condensate in the header will be carried along until it is trapped out or reaches the end of the header, the turbine on the end of the header may get a lot of water. The header should continue past the last steam take-off with a vertical drop-leg to accumulate the condensate to be trapped out. The use of a large, well-trapped drop-leg makes a very effective separator that will help to protect the turbine from large volumes of water such as caused by priming of a boiler.

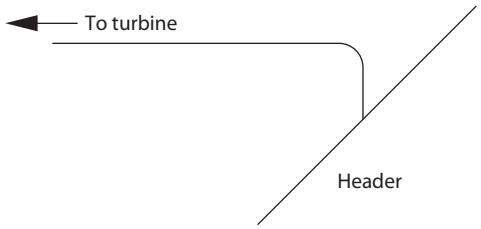

Figure C.10—Recommended Turbine Inlet Piping Arrangement from Header

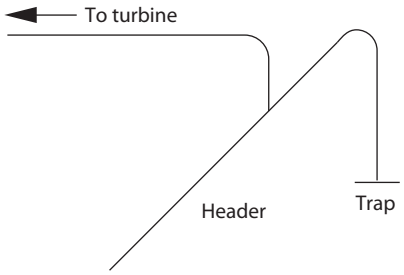

Figure C.11—Recommended Turbine Inlet Piping Arrangement at Header End with Drop Leg

Avoid low spots or pockets in inlet piping that may accumulate water. A pipe partially filled with water may continue to pass the quantity of steam required by a turbine until the steam passage becomes too restricted by the water. At this point the steam will start to move the water, which builds up as a wave and is carried along as a slug of water that can cause serious damage to the piping and the turbine. This is more prevalent in oversize steam lines where the steam velocity is too low to carry all the entrained moisture along.

A new piping system should be blown out by disconnecting the steam line at the turbine and running it to atmosphere. Blow the line out by opening a shut-off valve as near the boiler as possible so a high steam velocity is attained in the piping. Alternate blowing and cooling will tend to loosen scale, welding beads, and debris so it will be blown out.

C.3 Piping Supports

In the previous discussion the weight of the piping has not been considered. The dead weight of the piping should be entirely supported by pipe hangers or supports. There are basically two types of supports, rigid and spring. Rigid supports are necessary when an unrestricted expansion joint is used. Rigid supports may be used to limit the movement of a line to prevent excessive deflection at any point. A rigid support is not satisfactory where thermal expansion may cause the pipe to move away from the support.

On the two types of rigid supports shown in Figure C.12, the rise of the turbine case due to temperature would lift the base elbow from the support so the turbine would have to support the weight of the pipe. The expansion of the vertical run of pipe would relieve the pipe hanger of its load so the turbine would again have to support the weight of the pipe.

If an expansion joint with retraining tie rods is used, either a rigid pipe hanger or a base elbow with a sliding or rolling contact surface may be used as shown in Figure C.13.

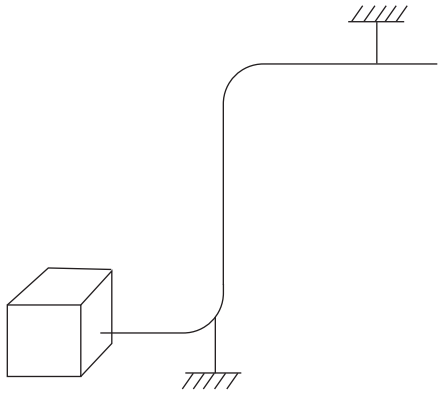

Figure C.12

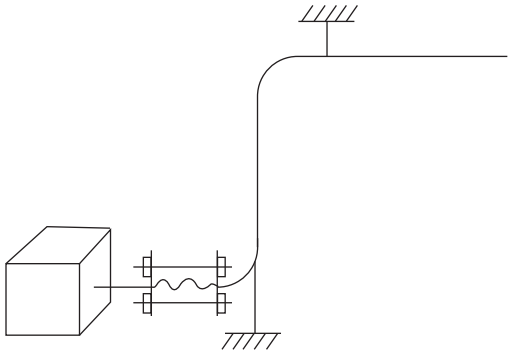

Figure C.13

When the thrust due to an expansion joint is less than the exhaust flange limits and no restraining tie rods are used, the pipe must have an anchor as shown in Figure C.14. Since this condition rarely exists, it is better to use one of the better arrangements such as shown in Figure C.13, and eliminate as much pipe reaction as possible rather than just stay within the limits.

Spring hangers or supports are best suited to carry the dead weight when there is thermal expansion to be considered. The movement of the pipe will change the spring tension or compression a small amount and the hanger loading a small amount but will not remove the load from the hanger. The published manuals on pipe design provide

information on hanger spacing to give proper support. In addition to this, it may be necessary to add additional supports or move existing supports if resonant vibration appears in the piping.

A spring support should not be used to oppose the thrust of an expansion joint, because when the pressure is removed from the line the spring support will exert a force the same as the expansion joint, only in the opposite direction.

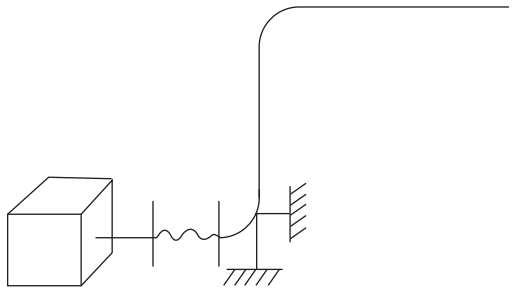

Figure C.14—Improper Use of Spring Support on Piping Expansion Joint

Annex D
(informative)

Field Relief of Pipe Strain

D.1 Introduction

D.1.1 The objective of this annex is to provide additional background instruction on the subject of the field relief of pipe-strain. The intent is that field personnel will utilize this information to prepare their own detailed procedures to more effectively perform this work.

D.1.2 Refer to Figure D.1 for an overall view of the process.

D.2 Preliminary Considerations

D.2.1 It is essential that a metallurgist or materials engineer review all welding, stress relief and heat treatment procedures before any heating of piping in the field is attempted. This review consists of evaluating all of the piping materials, welding materials, welding fluxes, and temperatures to verify that metallurgical structures will not be adversely changed as a result. The issues to be considered include avoiding the creation of brittle areas or sensitized areas that are more susceptible to corrosion or cracking in service.

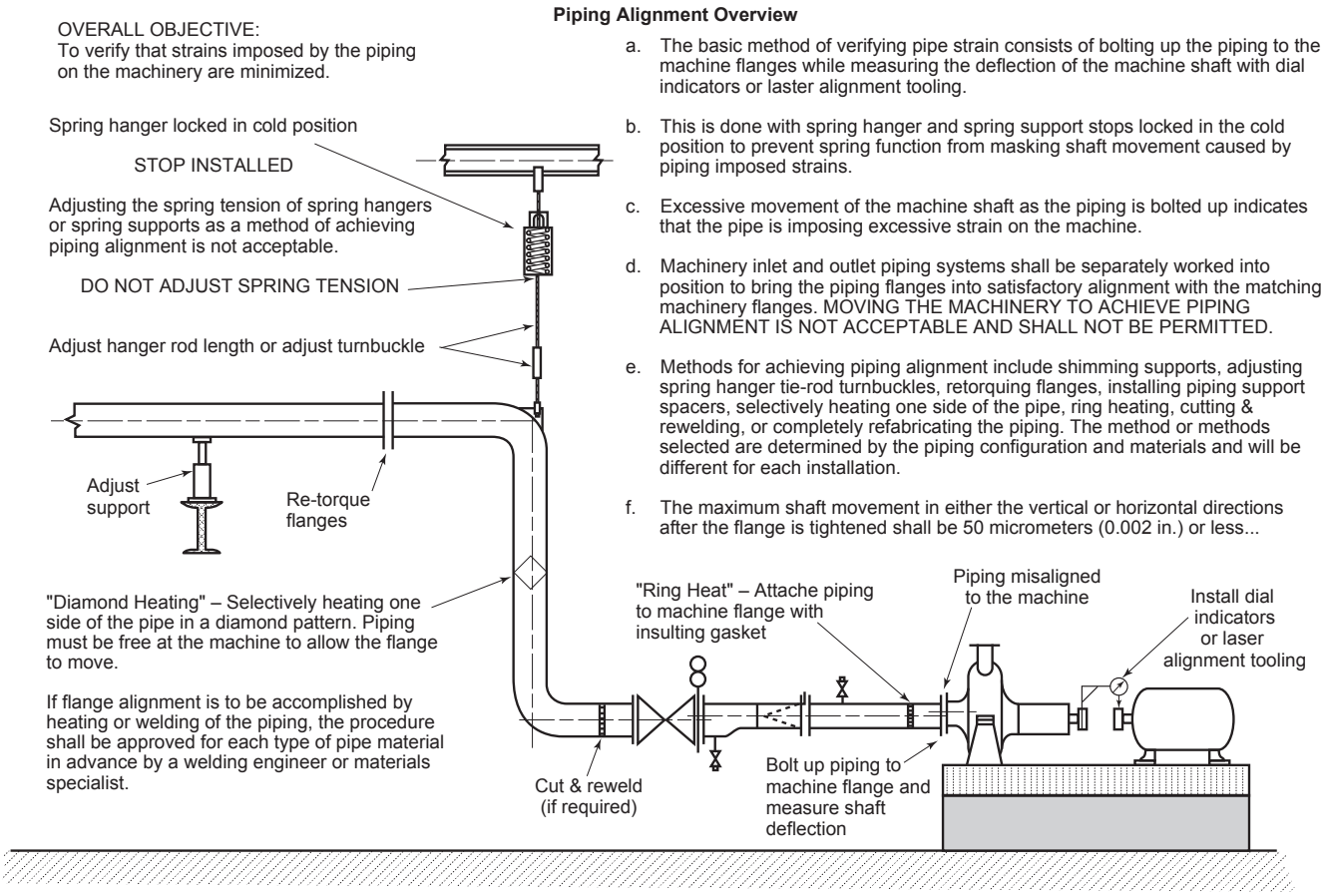

Figure D.1—Piping Alignment Overview

D.2.2 It is usually advantageous to relieve excessive pipe strain by mechanical methods rather than heating of pipe. Adjusting the height of spring supports or adjusting spring hanger turnbuckles is typically more cost effective than heating or welding pipe. Consider heating pipe only after all other mechanical means have been attempted.

D.2.3 It is important that all piping be complete before attempting to correct pipe strain. This means that the following items must be completely installed and completed before correcting for excessive pipestrain as follows:

D.2.3.1 The inlet and outlet piping to/from the machine must be completely installed with all specified fittings and blinds in place.

D.2.3.2 If temporary suction screens are specified to be in the suction of the machine then these screens must be installed before beginning the pipe strain relief process.

D.2.3.3 All specified pipe supports and/or spring hangers must be installed in the specified locations.

D.2.3.4 All piping hydrotesting must be complete and all temporary hydrotesting blinds removed.

D.2.3.5 All spring supports and spring hangers must have cold setting stops installed and be at the cold (or specified initial) settings.

D.3 Initial Pipe Strain Measurement

D.3.1 Disconnect inlet and outlet piping to/from the machine.

D.3.1.1 For most equipment this means disconnecting the primary inlet/outlet (suction/discharge) piping. Large piping typically has greater stiffness than small piping hence can impose larger forces on the equipment.

D.3.1.2 Auxiliary piping and/or large conduits must also be disconnected to obtain accurate pipe strain measurements. For example, lube oil drain piping typically is of a sufficiently large size that misalignment of the piping can adversely impose pipe strain on the machine bearing housing resulting in shaft misalignment.

D.3.2 Remove all bolts from the machinery flanges.

D.3.3 Adjust spring supports and/or spring hanger turnbuckles to bring the piping flanges into alignment with the machine flanges.

D.3.4 For both top and side connected piping a slight gap should be visible between the pipe flange and the machine flange. If not, then adjust the spring supports or hangers until a slight gap is visible. A slight gap means spacing approximately equal to the gasket thickness.

D.3.5 Install dial indicators on the machinery shaft-coupling hub. Alternately, laser alignment tooling can be used in place of dial indicators. The dial indicators will be used to measure shaft deflection as the piping is connected.

D.3.6 Verify pre-alignment of the driver shaft to the machine shaft. Verify that there is no machine soft-feet and that the machines are not “bolt bound.” “Bolt bound” means that a machine foot is hard against a hold-down bolt and that further movement to correct misalignment cannot be made.

D.3.7 Measure piping misalignment using feeler gages between the piping flanges.

D.3.7.1 Piping alignment requirements are specified in Section 4. Please refer to Figure D.2 for additional guidance.

D.3.7.2 Both axial spacing as well as angular misalignment must be measured and compared to the specified requirements.

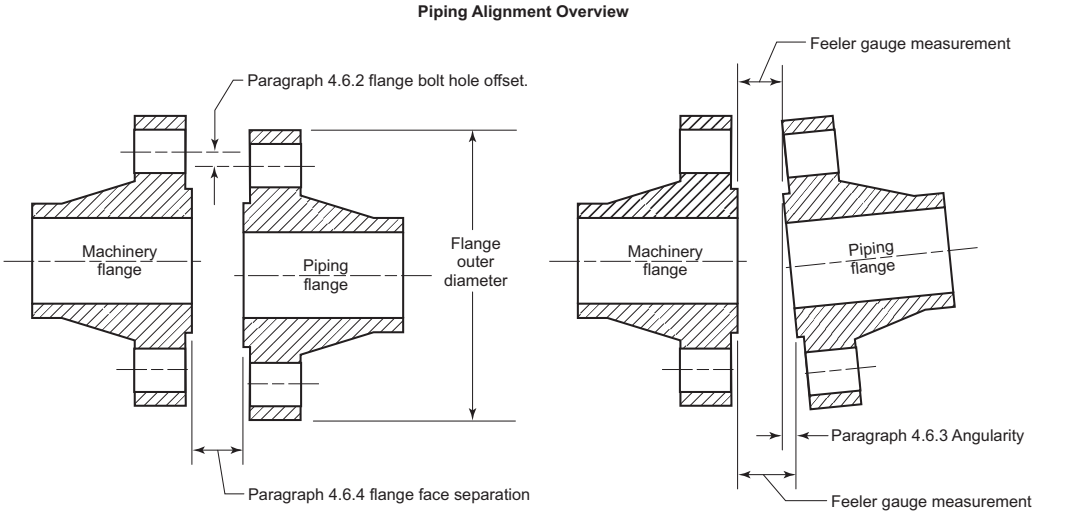

4.6.2 Pipe flange bolt holes shall be lined up with machinery nozzle bolt holes within 1.5 mm ($^1/_{16}$ in.) maximum offset from the center of the bolt hole to permit insertion of bolts without applying any external force to the piping.

4.6.4 Flange face separation shall be within the gasket spacing plus or minus 1.5 mm ($^1/_{16}$ in.). Only one gasket per flanged connection shall be used.

4.6.3 The machine and piping flange faces shall be parallel to less than 10 micrometers per centimeter (0.001 in. per in.) of pipe flange sealing surface outer diameter up to a maximum of 750 micrometers (0.030 in.). For piping flange sealing surface outer diameters smaller than 25 cm (10 in.), the flanges shall be parallel to 250 micrometers (0.010 in.) or less. Feeler gauge readings shall be taken at the outer diameter of the flange sealing surfaces.

NOTE The sealing surface of a raised face flange is the raised face. Thus feeler gauge readings are taken at the raised face. The sealing surface of a flat faced flange is the entire flange face. Thus feeler gauge readings for a flat faced flange are taken at the flange outer diameter. The sealing surface of a ring-joint flange are taken at the outer diameter of the raised face.

Figure D.2—Piping Alignment Requirements

D.3.8 Measure alignment of piping flange boltholes.

D.3.8.1 Two flanges may be parallel and have the correct axial spacing yet still be misaligned either due to rotation of one flange relative to the other or lateral displacement of one flange to the other.

D.3.8.2 Verification of lateral and rotational piping flange alignment is usually performed visually. If all of the flange bolting can be installed without the imposition of external force on the flanges, then the flanges are considered aligned. If there is any difficulty with insertion of the flange bolting then measurement of the flange bolt hole lateral and rotational offset is required.

D.3.9 Work the piping flanges into alignment by shimming spring supports and adjusting spring hanger turnbuckles. Only if these mechanical methods fail then proceed with heating piping as described following.

D.4 Heating Carbon Steel Pipe

D.4.1 General Considerations

D.4.1.1 The location on where to apply heat is dependent upon the piping configuration.

D.4.1.2 Heat is to be applied to the side of the piping that is to be shortened.

D.4.1.3 When a pipe side is shortened, the gap on that side of the flange is widened.

D.4.1.4 Heating applied to welds and elbows tends to result in larger pipe movements.

D.4.1.5 The piping flanges must be loose from the machine flanges. This allows the end of the piping to move as the piping cools.

D.4.2 A large torch heating tip is used to apply heat to the piping in an approximate diamond shape. The torch heating tip is commonly referred to as a “rosebud” tip. This process is typically referred to as “diamond heating” due to the pattern of the applied heat, please refer to Figure D.3 for guidance.

D.4.3 The required temperature range to move the piping is between 611 °C to 722 °C (1100 °F to 1300 °F). This is a dull red color.

D.4.4 Measurement of piping temperature can be done by several methods. However, portable direct reading infrared temperature instruments or contact pyrometers give the best results.

D.4.5 Some scaling of the pipe can be expected, particularly in the upper end of the temperature range.

D.4.6 Water quenching of the heated pipe must not be used if the temperature inadvertently exceeds the upper end of the temperature range because of the possibility of hardening and cracking the pipe.

D.4.7 Do not force the piping into alignment. The thermal contraction of the piping will provide the forces necessary to move the pipe.

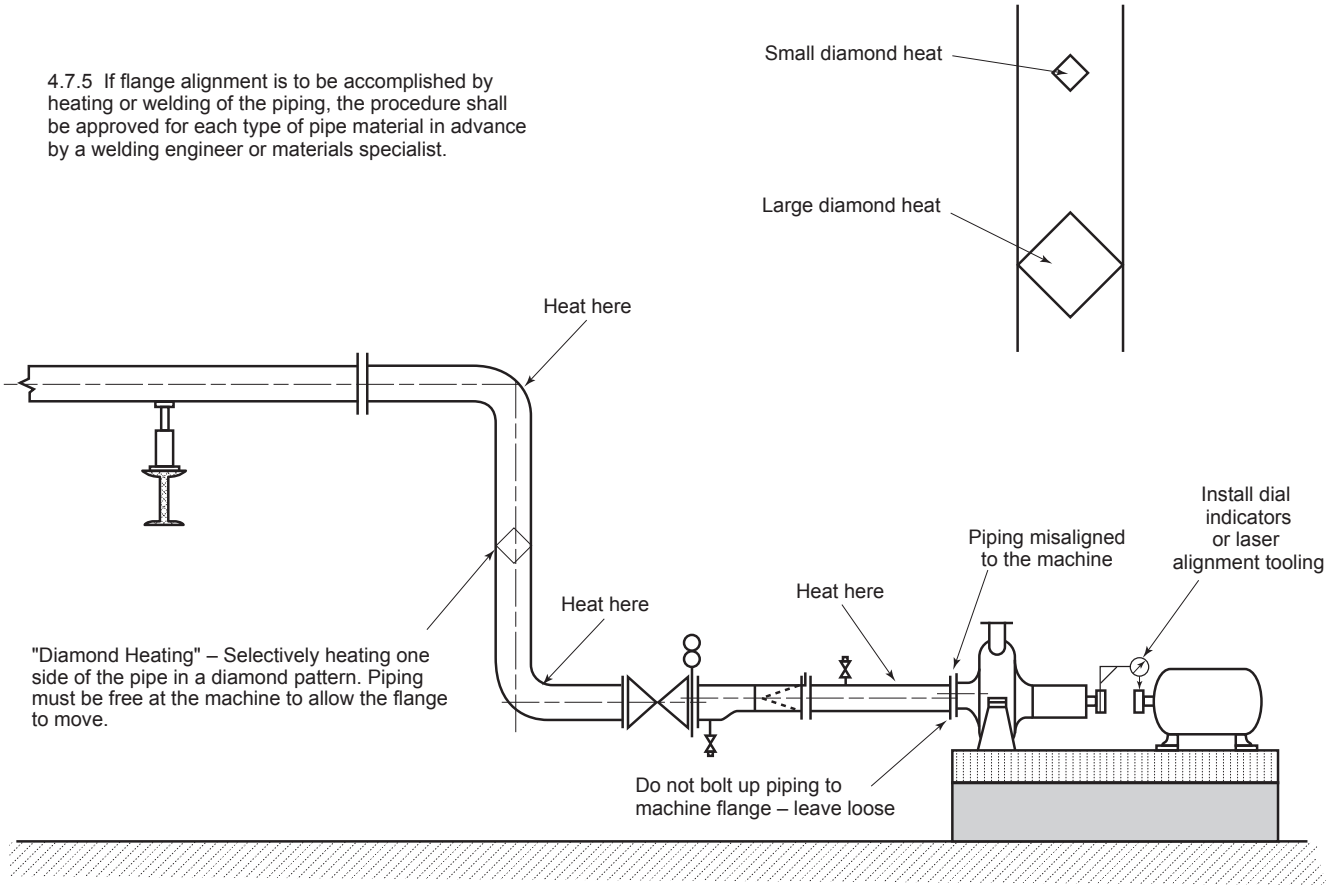

Figure D.3—Diamond Heating Pipestrain Relief

D.5 Final Piping Alignment

D.5.1 Repeat the measurement of pipe flange alignment using visual inspection and feeler gage measurements as described previously. Pipe flanges must be loose from the machine flanges with a visible air gap between the flange faces for this to be a meaningful measurement.

D.5.2 Verify that the pipe flange alignment measurements are within the specified requirements.

D.5.3 Verify that the shaft coupling hub dial indicators and/or laser alignment tooling are properly zeroed.

D.5.4 Install the specified flange gasket and bolting into one of the machinery inlet/outlet flanges.

D.5.5 Begin tightening the flange bolts using a “crisscross” or “star” pattern in which flange bolts on opposite sides of the flange are gradually tightened. Continue to tighten in this manner until all of the flange bolts have been tightened to the total final torque value. Initial tightening of the flange bolts shall be snug (10 % of total torque). Flange bolts shall then be tightened in increments of 30 % of the total torque until achieving 100 % of final torque. Piping bolt torque values shall be as specified by the piping engineering designer or the machinery manufacturer taking into account whether bolt threads are lubricated or non-lubricated.

NOTE The intent is that all of the flange bolts are tight such that the proper compression of the gasket has been achieved.

D.5.6 Observe the dial indicators or laser alignment tooling mounted on the machinery shafts or shaft coupling hubs while tightening the flange bolts. Continue to tighten the flange bolts until the final bolt torque values are reached.

NOTE It is essential to use two dial indicators during the flange bolt tightening such that both horizontal and vertical coupling movements may be observed simultaneously.

D.5.7 The machinery shaft movement may exceed 50 micrometers (0.002 in.) while the flange bolts are being tightened. This is acceptable providing that the final movement of the machinery shaft is less than the 50 micrometer (0.002 in.) requirement.

D.5.8 The above requirement of shaft movement less than 50 micrometers (0.002 in.) represents the total shaft movement after all machinery flanges have been tightened,

D.5.9 If two or more machines share a common manifold or header, then all of the machines connected to the manifold or header must be monitored for shaft movement while connecting the piping to the machine.

D.5.10 After correct piping alignment has been completed, final alignment of the driver and driven machines may be initiated.

D.6 Considerations for Heating Chrome-moly Steel Pipe

D.6.1 Electrical methods must be used for heating alloy steel pipe instead of open-flame/torch-based methods.

D.6.2 Hardness tests must be taken of the piping before and after the heating process.

D.6.3 Bolt the pipe flange to the machinery flange using an insulating gasket between the flange faces. The purpose of this insulating gasket is to provide thermal insulation between the flanges. This insulating gasket will prevent excessive heat from being conducted across the flange faces and into the machinery case.

D.6.4 Use electrical pipe stress heating coils with blanketing insulation to apply heat in a “ring” around the circumference of the piping.

D.6.5 Always apply “ring” heat to the piping side of the flanges. Never apply “ring” heat to the machinery side of the pipe flange to avoid distorting the machinery casing or damaging internal components.

D.6.6 Ring heat is typically applied in a band at least 6 cm (2 in.) wide.

D.6.7 The required temperature is between 677 °C to 722 °C (1250 °F to 1300 °F). The piping must be held at this temperature for at least four hours and then allowed to cool **slowly**.

D.6.8 Measurement of piping temperature is best done by direct reading contact pyrometers (thermocouples).

D.6.9 Do **NOT** water quench the piping due to the susceptibility to hardening.

D.6.10 Once the piping has cooled, repeat hardness measurements and compare to initial readings. The Materials Engineer or Metallurgist must review these hardness measurements and verify that no objectionably hard spots exist on the piping and to ascertain the need for further stress relief.

D.6.11 Loosen the piping flange from the machine flange. Remove all flange bolts and the insulating gasket.

D.6.12 Proceed with final piping alignment measurements as described above.

Recommended Practice for Machinery Installation and Installation Design

Chapter 7—Shaft Alignment

Downstream Segment

API RECOMMENDED PRACTICE 686
SECOND EDITION, DECEMBER 2009

American Petroleum Institute

Contents

Page

1 Introduction and Conflicting Requirements . . . 7-1
1.1 Introduction . . . 7-1
1.2 Scope . . . 7-1
1.3 Conflicting Requirements . . . 7-1

2 Definitions . . . 7-1

3 General Requirements . . . 7-4
3.1 Installation Data . . . 7-4
3.2 Format . . . 7-5
3.3 Ambient Offset . . . 7-5
3.4 Operating Temperature Alignment . . . 7-5
3.5 Alignment Fixtures and Tools . . . 7-5
3.6 Service Representative Hold Points . . . 7-6

4 Alignment Types . . . 7-6
4.1 General . . . 7-6
4.2 Dial-indicator-based Alignment . . . 7-6
4.3 Non-dial-indicator-based Alignment . . . 7-7
4.4 Operating Temperature (Thermal) Alignment . . . 7-8

5 Field Alignment Requirements . . . 7-8
5.1 Pre-alignment . . . 7-8
5.2 Qualifications . . . 7-10
5.3 Documentation and Witness of Alignment . . . 7-10
5.4 Alignment Tolerances . . . 7-11
5.5 Sag . . . 7-14
5.6 Gear Procedures . . . 7-14
5.7 Bearing Type . . . 7-15
5.8 Fixed Component . . . 7-15
5.9 Dowels . . . 7-15

Annex A (normative) **Machinery Installation Shaft Alignment Checklist** . . . 7-16

Annex B (informative) **Reverse Rim Dial Datasheet** . . . 7-18

Annex C (informative) **Rim and Face Datasheet** . . . 7-20

Annex D (informative) **Types of Alignment** . . . 7-22

Annex E (informative) **Hold-down Bolt Torque Tables** . . . 7-26

Annex F (informative) **Gearbox Shaft Movement** . . . 7-27

Figures
1 Angular Misalignment . . . 7-2
2 Combination Misalignment . . . 7-2
3 Parallel Offset Misalignment . . . 7-4
D.1 Reverse Rim (Dial) Alignment . . . 7-23
D.2 Three Dial Rim and Face Alignment . . . 7-24
F.1 Pinion Driving (Gear Driven) . . . 7-27
F.2 Pinion Driven (Gear Driving) . . . 7-27

Page

Tables

E.1 30,000 psi Internal Bolt Stress 7-26
E.2 2110 kg/cm Internal Bolt Stress 7-26

Recommended Practice for Machinery Installation and Installation Design
Chapter 7—Shaft Alignment

1 Introduction and Conflicting Requirements

1.1 Introduction

Good shaft-to-shaft alignment of rotating machinery is essential for long-term operation. Operating history by users has indicated it is good practice and cost effective to limit the operating misalignment to low values. Good shaft alignment reduces the forces acting on rotating shafts, bearings, and other wearing components. This ultimately leads to longer, more reliable operation of machinery trains. The main consideration is to reduce, as much as practical, the operating misalignment of two rotating shaft elements connected by a coupling element.

For the purpose of this section, a machinery train consists of two rotating shafts connected by a coupling. Trains with more than one coupling are divided into two or more single coupling trains and treated in sequence.

One of the most important factors in ensuring that alignment of machinery is good at the completion of installation is the early involvement of the designated machinery representative and the manufacturer's representative during construction.

1.2 Scope

This recommended practice (RP) is limited to machinery elements where at least one element is free to move in the horizontal, vertical, and axial directions. Any equipment trains in a user facility, where one or more of the elements in the train is covered by API rotating equipment standards and/or ASME pump standards, may be covered by this RP. Vertically installed and other equipment "assemblies" that are aligned by means of rabbet or machined fits are not covered by Chapter 7. It is the responsibility of the supplier and purchaser to provide acceptable alignment before this type of machinery is installed in the field. The user may consider checking the alignment of this type of equipment when it is installed in the field. The procedures may be developed jointly between the user, equipment installer, and equipment supplier. Also excluded is internal equipment alignment of rotating shaft to stationary elements or internal alignment of equipment by adjusting support positions (e.g. reciprocating compressors alignment by web deflection).

1.3 Conflicting Requirements

Any conflicts between this RP and/or the equipment vendor's procedures or tolerances shall be referred to the user or the designated machinery representative. In general the most restrictive shall apply.

2 Definitions

For the purposes of this document, the following standard definitions will apply.

2.1
alignment
The process of reducing the misalignment of two adjacent shafts connected by a coupling so that the center of rotation for each shaft is as near collinear as practical during normal operation.

2.2
ambient offset
The practice of misaligning two shaft centerlines at ambient conditions to account for the estimated relative changes in shaft centerlines from static ambient conditions to dynamic operating conditions.

2.3
angular misalignment
The angle between the shaft centerline of two adjacent shafts. This angle is normally reported in slope of millimeters of change per meter of linear distance (mils per in.) (1 mil = 0.001 in.) (see Figure 1).

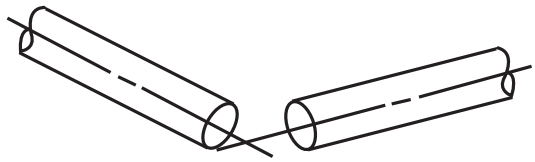

Figure 1—Angular Misalignment

NOTE Most misalignment is combination misalignment. It can be resolved into a parallel offset at a given point along the fixed machine centerline and angular misalignment in both the horizontal and vertical planes. The offset is dependent on the location along the fixed machine centerline where it is measured, normally the center of the coupling spacer.

2.4
bolt bound
Where any hold-down bolt is not free in the bolt hole, so that the ability to move the moveable element in a machinery train horizontally or axially is constrained.

2.5
combination misalignment
When the centerlines of two adjacent shafts are neither parallel nor intersect (refer to Figure 2). This misalignment is normally described in both angular and offset terms (see Figure 2).

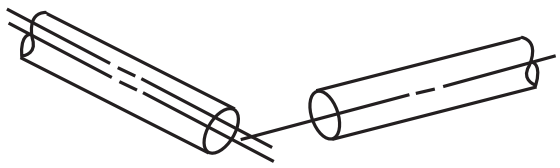

Figure 2—Combination Misalignment

2.6
designated machinery representative
The person or organization designated by the ultimate user of the equipment to speak on his/her behalf with regard to machinery installation decisions, inspection requirements, and so forth. This representative may be an employee of the user, a third-party inspection company, or an engineering contractor as delegated by the user.

2.7
distance between shaft ends
DBSE
The axial dimension between two adjacent machinery shaft reference points. This may be the shaft ends or a reference plane on the coupling flange(s). Coupling detail drawings and manufacturers alignment drawings must be consulted

2.8
elastomeric coupling
A coupling that obtains its flexibility from the flexing of an elastomeric element.

2.9
equipment installer
The person or organization charged with providing engineering services and labor required to install machinery in a user facility after machinery has been delivered. In general, but not always, the installer is the project construction contractor.

2.10
equipment train
Two or more rotating equipment machinery elements consisting of at least one driver and one driven element joined together by a coupling.

2.11
equipment user
The person or organization charged with operation of the rotating machinery. In general, but not always, the equipment user owns and maintains the rotating machinery after the project is complete.

2.12
flexible-element coupling
A type of rotating machinery coupling that describes both disk and diaphragm couplings. A flexible-element coupling obtains its flexibility from the flexing of thin disks or diaphragm elements.

2.13
gear coupling
A type of rotating machinery coupling that obtains its flexibility by relative rocking and sliding motion between mating, profiled gear teeth.

2.14
general-purpose
Refers to an application that is usually spared or is in noncritical service.

2.15
manufacturers or vendor representative
The person or organization designated by the equipment manufacturer or warranty holder to speak on his/her behalf pertaining to the equipment handling, installation and use.

2.16
mil
A U.S. customary unit equal to 0.001 in. (0.02 mm).

2.17
operating temperature (thermal) alignment
A procedure to determine the actual change in relative shaft positions within a machinery train from the ambient (not running) condition and the normal operating temperature (running) condition by taking measurements from start-up to normal operating temperature while the machine(s) is (are) operating, or after the shafts have been stopped but the machines are still near operating temperature.

2.18
parallel offset misalignment
The distance between two adjacent and parallel shaft centerlines (see Figure 3). This offset is normally reported in a unit (mm or mils).

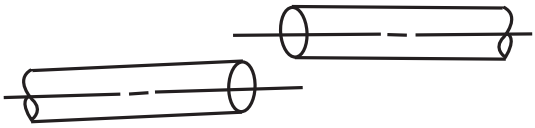

Figure 3—Parallel Offset Misalignment

2.19
special-purpose application
An application for which the equipment is designed for uninterrupted, continuous operation in critical service and for which there is usually no spare equipment.

2.20
total indicated runout
TIR
The runout of a diameter or face determined by measurement with a dial indicator (also known as total indicator reading). The indicator reading implies an out-of-squareness equal to the reading or an eccentricity equal to half the reading.

2.21
vendor
supplier
The agency that, supplies the equipment.

NOTE The vendor may be the manufacturer of the equipment or the manufacturer's agent and normally is responsible for service support.

3 General Requirements

3.1 Installation Data

Prior to alignment, the designated machinery representative shall provide datasheets and equipment arrangement drawings with, as a minimum, the information required in 3.1.1 through 3.6 completed for each equipment train. It shall be the designated machinery representative's scope to obtain the necessary alignment-related information from all vendors no matter how the equipment train is purchased or packaged and to coordinate all information necessary for alignment. Further, the designated machinery representative is responsible for providing the alignment information to the equipment installer in the specified format.

All design and installation requirements shall be ensured as being complete by completing the Installation Checklist in Annex A and submitting it to the user or his designated representative.

3.1.1 Define movable and fixed machines in a train.

3.1.2 Provide equipment outline drawings with the DBSE and/or coupling spacer gap length. Detailed coupling drawings clarifying DBSE as a reference plane on the shaft or coupling shall be provided by the coupling manufacturer.

3.1.3 When hydraulically mounted coupling hubs are used, the pull up dimension shall be provided by the coupling manufacturer.

3.1.4 When required, ambient offset alignment ideal target readings shall be supplied.

NOTE 1 The coupling spacer or DBSE readings and ambient offset readings are to be at operating conditions. All factors that can have an influence upon the relative position of the equipment centers of rotation or shaft axial position need to be considered.

This includes, but is not limited to, factors such as load, ambient temperature, process pressure, and process temperature.

NOTE 2 In general, for special-purpose equipment trains the equipment vendor will provide expected thermal growth changes and ambient offset.

3.1.5 Provide the locations of dowel pins, centering keys, keyways, bushings, and other similar items, when they are part of the equipment or required by the user.

3.1.6 The type of alignment method to be used.

3.2 Format

3.2.1 The user may specify the checklist and alignment datasheets from this RP. Alternately, the user or designated machinery representative may furnish installation checklists and datasheet forms for documentation of equipment alignment in the field.

3.2.2 Datasheets for trains consisting of more than two shafts that must be aligned shall be jointly agreed between the equipment installer and the user.

NOTE The standard datasheet format may be used if a datasheet is made for each coupling and the two machinery elements connected by the coupling.

3.3 Ambient Offset

3.3.1 Ambient offset alignment readings shall be provided by the user-designated machinery representative for general-purpose equipment trains with gearboxes.

3.3.2 Ambient offset alignment readings for special-purpose equipment trains shall be included on the datasheets by the designated machinery representative.

NOTE For special-purpose equipment, the vendor with overall unit responsibility normally will provide the thermal growth and ambient offset readings for the train. It is up to the designated machinery representative to ensure this information is included on the datasheets.

3.4 Operating Temperature Alignment

The user will identify which equipment trains are to be operating temperature aligned by the equipment installer.

NOTE Operating temperature alignment may be required when the equipment train operates above 150 °C (300 °F). Operating temperature alignment may be required on equipment trains where the user or the equipment vendor has experienced alignment-related vibration problems. It may also be required on equipment trains (prototype equipment trains) where the vendor has insufficient data to accurately predict equipment growth.

3.5 Alignment Fixtures and Tools

3.5.1 The equipment installer shall provide alignment fixtures (brackets) for the type of alignment specified by the user or user-designated representative. For general-purpose equipment trains, alignment brackets may be built by the equipment installer or may be a commercially available type specified by the user.

Unless otherwise specified, for special-purpose equipment the alignment fixtures shall be made for each special-purpose equipment train. The design of the fixture shall be jointly agreed upon by the equipment installer and the user or the user-designated representative.

3.5.2 The equipment installer shall furnish the special tools and computers and/or calculators required for the type of alignment specified.

3.5.3 Unless specifically exempted in the agreement between the user and the equipment installer, all special tools, alignment fixtures, and alignment brackets shall be tagged with equipment train item (identification) number and turned over to the user at the end of the project.

3.5.4 When the equipment installer is required by the user to perform operating temperature alignment requiring special tools, the equipment installer shall be responsible for providing the special tools unless specifically excluded from the installer's scope of supply. The equipment installer shall permanently tag and turn over to the user the operating temperature alignment fixtures and jigs at the completion of the project.

3.5.5 The use of magnetic alignment fixtures (brackets) is not permitted.

3.6 Service Representative Hold Points

The user or the designated machinery representative in conjunction with the equipment installer shall jointly identify on the project construction plan any equipment vendor's service representative alignment witness "hold" point necessary to maintain the equipment warranty.

4 Alignment Types

4.1 General

The user or the designated machinery representative and the equipment installer shall mutually agree on the appropriate type of alignment to be used for rotating equipment trains.

4.2 Dial-indicator-based Alignment

4.2.1 Unless otherwise specified by the user, the equipment installer shall use laser alignment methods to align equipment trains.

4.2.1.1 General requirements for reverse rim (dial) indicator method are listed in 4.2.1.2 through 4.2.1.7.

4.2.1.2 Reverse rim (dial) alignment shall be performed while turning both shafts at the same time in the direction of rotation.

NOTE 1 It is acceptable but generally less accurate and not efficient to do reverse dial (rim) alignment by installing a bracket on only one shaft at a time so long as both shafts are moved at the same time maintaining the same relative position.

NOTE 2 The benefit from rotating both shafts is to maintain the same relative position and minimize the error introduced from individual shaft runout.

CAUTION—Some equipment may be damaged by rotating it in the opposite direction of normal rotation. Turning of the equipment without lubrication on the sliding surfaces can cause damage.

4.2.1.3 Equipment shall be turned by hand whenever possible. When this is not possible, a strap wrench shall be employed. Pipe wrenches or any other turning devices that may mark the shaft or coupling are not allowed even if the shaft or coupling is protected during turning.

4.2.1.4 The alignment brackets shall not be used to rotate equipment. The only exception is for alignment brackets that have been specifically designed to rotate equipment without disrupting the indicators.

4.2.1.5 Readings shall be at 90 degree increments in the horizontal and vertical planes.

4.2.1.6 The installer shall use a level or other positive means to locate the vertical and horizontal planes.

4.2.1.7 For readings to be considered valid, the readings and zero shall repeat within 0.02 mm (1 mil). The algebraic sum of the horizontal readings shall also be equal to the algebraic sum of the vertical readings within 0.05 mm (2 mils) after correction for bracket sag. Typical datasheets for reverse rim indicator alignment are depicted in Annex B.

4.2.2 When specified, rim and face alignment may be used.

NOTE Rim and face alignment is recommended when the coupling hub or shaft end flange diameter is greater than the spacing between indicators or one of the train elements cannot be turned.

4.2.2.1 General requirements for rim and face indicator method are listed in 4.2.2.2 through 4.2.2.6.

4.2.2.2 Both shafts shall be turned together unless it is not possible to rotate one of the machinery element shafts during the alignment process.

CAUTION—Some equipment may be damaged by rotating it in the opposite direction of normal rotation. Turning of the equipment without lubrication on the sliding surfaces can cause damage.

4.2.2.3 Equipment shall be turned by hand whenever possible. When this is not possible, a strap wrench shall be employed. Pipe wrenches, chain wrenches, or any other turning devices that may mark the shaft or coupling are not allowed even if the shaft is protected during turning.

4.2.2.4 The alignment brackets shall not be used to rotate equipment. The only exception is for alignment brackets that have been specifically designed to rotate equipment shafting without disrupting the indicators.

4.2.2.5 Rim readings shall be taken with a dial indicator. When rim readings are made to a stationary shaft or hub, the equipment installer shall confirm the machined surface of the stationary machine is concentric to the centerline of rotation and that the hub runout is 0.02 mm (1.0 mil) or less.

NOTE This might not be possible if one of the equipment shafts cannot be turned and requires pre-installation verification and advanced planning.

4.2.2.6 Face readings shall be taken with a dial indicator whenever possible. When there is insufficient space or one of the shafts cannot be rotated, micrometer measurements to an accuracy of 0.01 mm (0.5 mil) are to be used. Typical datasheets for reverse rim indicator alignment are depicted in Annex C.

4.3 Non-dial-indicator-based Alignment

4.3.1 Unless otherwise specified by the user or the designated machinery representative, the laser alignment method shall be used for coupling alignment.

NOTE Laser alignment is alignment by a laser beam where the laser is mounted on one shaft, and a receiver or reflector is mounted on the other. The deviation in the beam is measured as the shaft is turned. There are several commercially available systems, each with different options for alignment configuration and transducer mounting.

4.3.1.1 General requirements for laser alignment are listed in 4.3.1.2 through 4.3.1.9.

NOTE The calibration date for the laser alignment apparatus should always be checked prior to its use. As a general rule, laser alignment tools should have their calibration checked every six months.

4.3.1.2 Interpretation of the data shall be done by an alignment computer supplied with the laser alignment system and configured for the equipment train dimensions and ambient offset.

4.3.1.3 The laser alignment equipment shall be installed for a period of time sufficient for the temperature of the brackets to equalize with the surroundings.

4.3.1.4 Both shafts shall be rotated at the same time in the normal direction of rotation. Equipment shall be turned by hand whenever possible. When this is not possible, a strap wrench shall be employed.

NOTE This is commonly done with the coupling temporarily bolted up. The concerns of backlash and windup may be avoided in this manner.

CAUTION—Some equipment may be damaged by rotating it in the opposite direction of normal rotation. Turning of the equipment without lubrication on the sliding surfaces can cause damage.

4.3.1.5 Pipe wrenches or any other turning devices that may mark the shaft or coupling are not allowed even if the shaft is protected during turning.

4.3.1.6 Alignment fixtures shall not be used to rotate the equipment.

4.3.1.7 The location where readings are taken shall be measured with a level or other device to positively locate the reading points in the horizontal and vertical plane.

4.3.1.8 Laser alignment equipment shall be operated by personnel trained in its use.

4.3.1.9 The equipment installer shall comply with all safety and control requirements for electrically powered equipment.

NOTE The various types of alignment procedures along with their associated advantages and dissadvantages are detailed in Annex D.

4.4 Operating Temperature (Thermal) Alignment

4.4.1 There are several recognized systems for determining the change in alignment between ambient conditions and operating conditions. The designated machinery representative and the equipment installer shall agree on which equipment trains operating temperature alignment will be used and the recognized system to be used. Several of the currently recognized methods for operating temperature alignment are outlined in D.4.

NOTE Methods that involve shutting the equipment down and attempting to get alignment readings while the machine cools down are normally unacceptably inaccurate. In some cases where the machines can be checked by heating to operating conditions while the equipment is stopped, it may be acceptable to do operating condition alignment. An example of this would be to monitor alignment readings as a pump is preheated to operating temperature by back-flowing through the pump.

4.4.2 When operating temperature alignment is required, alignment checks shall be done with the equipment in operation. The procedure and tolerances for operating temperature alignment shall be mutually agreed upon by the designated machinery representative and the equipment installer.

NOTE If an equipment train exhibits misalignment-related symptoms during initial plant start-up or site testing, check first that the operating conditions are in-line with the predicted conditions and sufficient time has been allowed to assure that the equipment train is thermally stabilized (see Chapter 9 on commissioning) Other potential causes, such as pipe strain, should also be investigated. See the piping section of this RP (see Chapter 6) for pipe strain requirements and checks. If an equipment train continues to exhibit misalignment symptoms, the user or designated machinery representative may coordinate with the equipment installer to fit an operating temperature alignment system that will indicate changes in relative shaft position of equipment from ambient conditions up to operating conditions.

4.4.3 The equipment installer may be directed during testing or start-up to adjust ambient offset of an equipment train provided with an operating temperature alignment system. The ambient cold offset data shall be provided by the designated machinery representative.

5 Field Alignment Requirements

5.1 Pre-alignment

Prior to alignment of an equipment train, the pre-alignment activities outlined in 5.1.1 through 5.1.13 shall be completed by the equipment installer.

5.1.1 A pre-alignment meeting shall be held between the designated machinery representative and the installer's personnel responsible for machinery alignment activities.

5.1.2 The foundation shall be cured and mounting plate installed and leveled in accordance with the procedures outlined in other sections.

5.1.3 The equipment shall be installed on the mounting plate or plates with the component that is designated fixed, centered in the hold-down bolts.

5.1.4 Prior to beginning alignment activities, the coupling hubs shall be installed in accordance with the equipment arrangement drawing and instructions including design pull-up and final hub position on the shaft. Coupling hub run-out readings shall be taken at the coupling hub rim on machined surfaces perpendicular to the centerline of rotation. Readings shall also be taken on the face of the coupling hub machined surfaces as far as practical from the shaft center of rotation. Installed coupling hubs shall have 0.05 mm (2 mils) or less total indicated runout (TIR) or the equipment vendor's requirements, whichever are more restrictive. This limitation applies both to the coupling rim as well as to the coupling face.

NOTE 1 Special-purpose equipment coupling hub runout requirements often will be more restrictive.

NOTE 2 General-purpose equipment with elastomeric-style couplings may be exempted if there are no machined surfaces provided on the coupling hub.

NOTE 3 The presence of significant runout (half of the alignment tolerance or more) will require the rotation of the shafts together (temporarily coupled) or remedial actions.

5.1.5 Prior to grouting, a preliminary shaft alignment shall be made. Final alignment tolerance need not be achieved, but the equipment installer shall confirm that the required axial, horizontal, and vertical alignment tolerances are achievable during final alignment without modifications to the machinery or hold-down bolts. The designated machinery representative shall approve the machinery preliminary alignment prior to grouting.

5.1.6 Grouting of the machinery mounting plate shall be completed, cured, and approved.

5.1.7 Appropriate tools and alignment fixtures shall be on hand. If dial indicator alignment is to be done, the sag measurement for the fixture to be used shall be completed and recorded. Sag measurements must be recorded for the 3, 6, 9, and 12 o'clock positions.

NOTE Alignment brackets may have different amounts of sag in the 3 and 9 o'clock positions and must be compensated for.

5.1.8 The torque requirements for the equipment feet hold-down bolting are established in accordance with the vendor's specification or user's requirements. If there is no figure available from the equipment vendor, then Annex E may be used.

5.1.9 The equipment installer shall confirm there is on hand necessary lifting equipment, suitable jacks, or jackbolts to elevate the movable equipment sufficiently to install shims. If jackbolts were not provided, the equipment installer shall provide suitable means to horizontally and axially move and restrain machinery accurately to 0.02 mm (1 mil).

5.1.10 The equipment installer shall confirm equipment hold-down bolts and any special washers supplied are on hand. Undercut hold-down bolts are unacceptable.

5.1.11 Before starting alignment, the equipment shall be disconnected from piping and conduit as much as possible. All process piping (including driving and exhaust steam piping on turbines) shall be disconnected.

5.1.12 Except in special cases agreed upon by the user, both the movable and fixed equipment shall be free to turn.

5.1.12.1 Pumps with mechanical seals shall have the seal locking tabs disengaged before turning the equipment to obtain alignment readings.

5.1.12.2 Any packing or blocking material that interferes with shaft rotation shall be removed.

5.1.12.3 Provide lubrication for bearings during turning. See machinery instruction manual for lubrication type and proper viscosity.

5.1.13 Equipment outline drawings and vendor's instructions shall be available. Datasheets with desired final readings shall be provided for the type of alignment specified.

NOTE The preparation of an alignment table for the rotating equipment on sizable projects (sizable meaning a large number of grouted pieces of equipment) is recommended. This would include the alignment method, cold alignment target, hot alignment target (if appropriate) and the required tolerances. The size and required torque of the hold-down bolts should also be included.

5.2 Qualifications

5.2.1 The equipment installer for a project shall demonstrate the competence of his/her alignment personnel to perform alignment of general-purpose equipment trains to the satisfaction of the designated machinery representative. It is not the user's responsibility to train the equipment installer's personnel in analytical or graphical methods of alignment.

NOTE The ability of the equipment installer's mechanical personnel (millwrights) to perform alignment to the user requirements for general-purpose equipment is a significant factor in reducing the time and improving the cost effectiveness of a project.

5.2.2 The equipment installer shall obtain the assistance of an experienced qualified person or persons to assist the installer's mechanical personnel (millwrights) with alignment of special-purpose equipment trains. The designated machinery representative shall be consulted and agree on the selection of the qualified person(s).

The qualified person may be a user's rotating equipment specialist, qualified equipment vendor's service representative, installer's machinery alignment specialist, or a third-party machinery alignment specialist. The designated machinery representative shall witness and accept final alignment with and without pipes connected, or any other critical points defined by the user.

5.3 Documentation and Witness of Alignment

5.3.1 It is the responsibility of the equipment installer to record and maintain all alignment records and datasheets in the user-specified format. At the completion of the project, the equipment installer shall provide original copies of alignment records along with other project rotating equipment records to the user.

The records must include raw and sag compensated alignment readings, axial spacing and shaft axial positions relative to thrust bearings and gear mesh. The readings at 3 o'clock and 9 o'clock positions must be referenced to some physically fixed position near the equipment.

5.3.2 The equipment installer shall provide notice to the designated machinery representative of witness (hold) points. The notification period shall be agreed on between the equipment installer and the designated machinery representative. As a guideline, the notification should be 24 hours for local (resident) representatives. Five working days' notice may be necessary when the representative is not local or when vendor's service representative witness "hold" point is required.

5.4 Alignment Tolerances

5.4.1 Axial Spacing Tolerance

5.4.1.1 For flexible-element couplings, the coupling spacer gap length or distance between shaft ends (DBSE) shall be set as specified on the construction package datasheet or general arrangement drawing or within ±0.50 mm (±20 mils) unless a closer tolerance is specified by the vendor.

5.4.1.2 For spacer couplings, the coupling spacer free length shall be measured and used when setting the spacer gap length.

5.4.1.2.1 When available, the expected shaft thermal growth shall be included in the calculation of the spacer gap length for general-purpose equipment.

5.4.1.2.2 For special-purpose equipment, the expected relative movement of the shafts shall be accounted for in the setting of spacer gap length. The manufacturer shall provide axial spacing and tolerances. Reference to the specific installed coupling will be made.

5.4.1.2.3 Axial alignment shall be done after the motor magnetic center is marked during field or factory run-in. The motor shaft shall be located on magnetic center. If the motor cannot be run for magnetic center due to an end fan, the motor manufacturer must specify the shaft position.

5.4.1.2.4 Spacer gap length for steam turbines and process equipment with hydrodynamic thrust bearings shall be set with the shafts against their respective active thrust bearings.

5.4.1.3 The axial tolerance for DBSE or spacer gap length of equipment trains with gear or elastomeric couplings shall be set as required by the coupling or machinery vendor. The DBSE or spacer gap length shown on equipment arrangement drawing or coupling vendor's drawings shall be held within 1.00 mm (±40 mils) unless a closer tolerance is specified.

5.4.2 Shim Requirements

5.4.2.1 The maximum allowable number of shims under any equipment support foot is five.

5.4.2.2 The movable machine shall have a minimum of 3 mm (0.125 in.) of series 300 stainless steel shims under each support foot. The maximum shim stack height shall not exceed 12 mm (0.5 in.). Only one 3 mm (0.125 in.) or thicker shim per mounting foot is allowed. The use of tapered shim packs, laminated or peelable shims, brass shims, aluminum shims, plastic shims and shims thinner than 0.05 mm (2 mils) is not permitted. Ground shims shall have a surface finish of 64 Ra or better. Shims shall be finished flat to within 0.1 mm per dm (1 mil/in.) of length. Unless otherwise specified by the user or his/her designated representative it is not acceptable to cut shims from rolled shim stock. Precut shims from a commercial source acceptable to the user are required. Alternately, shims may be furnished by the equipment vendor or cut to size and ground from plate. Shims shall have cut outs approximately 6 mm (0.25 in.) larger than the diameter of any vertical jack bolts, so as to clear the jack bolt and the deformation of the mounting pad on the baseplate that those jack bolts cause.

NOTE 1 The practice of cutting shims from rolled shim stock by hand in the field often leads to rolled and crimped edges and is not considered to be good practice for equipment installation. In the event that they must be used, care must be exercised to remove the cutting burrs by means of "hammering."

NOTE 2 Spacers for special-purpose applications may be required.

5.4.2.3 The stack-up of shims under the equipment support point used for alignment shall be measured. Individual shims shall be measured and totaled. The total stack thickness and number of shims shall be recorded on the

alignment datasheet. Measurement shall be recorded to the nearest 0.02 mm (1 mil). For relatively large shims, the measurement will be in two or more locations to confirm the flatness requirement.

NOTE Large shims are defined as greater than or equal to 150 mm (6 in.) long or have an area greater than or equal to 150 cm^2 (25 $in.^2$).

5.4.2.4 All shims shall be full-bearing. This includes precut commercial shims used under the feet of general-purpose equipment and NEMA frame motors. Shims for special-purpose equipment shall be supplied from the equipment vendor. If a shim must be made on site, it shall be patterned from the equipment vendor's shim or support foot.

NOTE 1 Shims that match or exceed the equipment foot load-bearing area and outline are considered to be "full-bearing." In cases where the equipment does not have distinctive (separate) support "feet", the "full-bearing area" will be centered on the hold-down bolt and equal in width to the support (machined area) depth, unless otherwise specifically instructed by the equipment manufacturer (some special-purpose equipment does have extended support-area requirements).

NOTE 2 The actual area of contact of the foot to the shims is very important and should be addressed as a part of the "soft-foot" checks (see 5.4.4).

5.4.2.5 Alignment shims used on centerline or near centerline-supported equipment shall not extend beyond the machined support pads.

5.4.2.6 The use of shims under special-purpose machinery gearboxes to correct for soft-foot or gear tooth contact is **NOT** permitted.

5.4.3 Bolts and Bolt Clearance

5.4.3.1 Undercutting of hold-down bolts for alignment is not permitted.

NOTE Vendors may supply special reduced diameter hold-down bolts for increased stretch at a given preload. These specialty bolts are not provided for additional alignment movement, nor should the reduced section come into contact with other metal surfaces.

5.4.3.2 Lock washers are not permitted at machinery hold-down bolts.

5.4.3.3 If special washers are not provided by the equipment vendor or standard washers yield when the hold-bolts are torqued to the required value, the installation contractor shall provide thick ground washers at the hold-down bolts. In the absence of suitable washers from the equipment vendor, the equipment installer shall obtain washers that do not permanently deform. The user may provide the size (thickness, outside diameter, and inside diameter) and material requirements for the washers.

NOTE Due to the clearance necessary for hold-down bolts, standard thickness washers often are insufficient to distribute the bolt clamping force to the equipment foot without excessive deflection or yielding of the washer.

5.4.3.4 Hold-down bolts shall not be bolt bound. Unless otherwise specified by the user, after final alignment the hold-down bolt hole shall be reasonably centered based on visual examination.

5.4.3.5 The equipment installation contractor shall record the following on the datasheets for special-purpose equipment:

a) the size of the hold-down bolt,

b) confirmation that the minimum clearance is acceptable, and

c) the torque to tighten the bolt.

Table E.1 and Table E.2 shall be used for torque value unless otherwise specified by the user or the equipment vendor.

NOTE Some types of equipment have hold-down bolts that are not to be tightened fully and are set to allow thermal expansion. These applications may also include a sleeve to maintain a gap from 0.005 in. to 0.010 in. (0.1 mm to 0.25 mm) between the top of the foot and the bottom of the bolt head. The vendor's installation manual should be consulted to determine if there are movable feet under any hold-down bolt and tighten accordingly.

5.4.4 Soft-foot

5.4.4.1 The soft-foot check shall be done with piping disconnected from the equipment body to be checked. A soft-foot check shall be made during final alignment on each equipment foot. Maximum permissible movement is 0.05 mm (2 mils) at each foot.

NOTE In certain applications with high thermal growth anticipated, higher soft-foot values may be acceptable with the approval between the manufacturer and the user or his/her designated machinery representative (under hot running conditions, this soft-foot condition is eliminated).

5.4.4.2 All hold-down bolts shall first be tightened. If available, use the torque specified by the equipment vendor at the support foot hold-down bolts. If there are no torque requirements specified by the vendor, then use Table E.1 and Table E.2. Measurement shall be taken as the bolt is loosened. The hold-down bolt shall be tightened before going to the next foot. Unless approved by the user, soft-foot checks shall be made on each foot of the equipment and not at the coupling.

NOTE 1 Often equipment trains have hold-down feet that are not accessible with a dial indicator and still have room to apply a wrench to a hold-down bolt. The designated machinery representative may allow the soft-foot checks to be made by checking shaft end movement in both the vertical and horizontal direction.

NOTE 2 Casing distortion due to soft-foot may not be readily measurable at the shaft end. Sensitivity of the equipment to distortion may cause alignment/operational problems even with little detectable (at the shaft end) soft-foot. The measurement of soft-foot close to the foot-hold-down-bolt location is always preferable.

5.4.4.3 After soft-foot checks are made, the installer shall confirm hold-down bolts at equipment sliding feet are tightened in accordance with the vendor's instructions.

5.4.5 Recording of Alignment Readings

5.4.5.1 Alignment readings shall be recorded before and after connecting the piping and conduit (see 4.8 of Chapter 6 for allowance). Additionally, the alignment both before and after the piping is connected shall be within the alignment acceptance criteria of 5.4.6 as follows.

5.4.6 Shaft Centerline Relationship Tolerance

5.4.6.1 The installer shall align all machinery trains to either the tolerance given in 5.4.6.2 or unless the vendor's tolerance is more restrictive. Alignment tolerances are after factors such as thermal offset and alignment bracket sag are accounted for.

5.4.6.2 When using reverse rim (dial) indicator methods or laser alignment equipment that resolves alignment into reverse rim equivalent readings, the maximum out of tolerance is 0.5 mm per meter (0.5 mils per in.) at both flex plane locations.

NOTE 1 Actual misalignment is TIR/2 divided by the distance between indicators.

NOTE 2 Misalignment capability is determined by the coupling design and the separation between the flexing planes (or typically the spacer length). Coupling alignment capabilities are never to be used as the alignment criteria for rotating equipment.

5.4.6.3 When using rim and face alignment or alignment computers that resolve misalignment into angularity, the alignment tolerance is 0.03 degrees.

5.4.6.4 This angle must be determined at each hub on spacer couplings. The tolerance applies at each hub (flex plane) location.

5.4.6.5 When using rim and face alignment methods to align machinery trains with both close coupled machines or elastomeric couplings, the angularity shall not be greater than 0.03 degrees and the offset at the center of the coupling shall not exceed 0.02 mm (1 mil).

NOTE 1 Close coupling increases the severity of misalignment effects and thus requires at least the same level of precision as other arrangements.

NOTE 2 The choice of coupling type (and its published "capability") is not the determiner of the equipment alignment requirements.

5.4.7 During alignment and pipe strain checks, the bearing bracket support foot (if existing) on single stage overhung pumps shall be loosened. The maximum amount of movement at the coupling during the tightening process shall be 0.05 mm (2 mils). Once this alignment is completed, for final acceptance, the bearing bracket support shall be shimmed and tightened. The maximum amount of movement at the coupling during the tightening of the bearing bracket support foot shall be 0.05 mm (2 mils).

NOTE This process will minimize some forms of detrimental casing strain on this type of equipment.

5.4.8 After completion of alignment and installation of piping, all equipment shall be turned by hand or strap wrench to ensure that detrimental case distortion has not occurred.

5.4.9 Final alignment shall not be done until the process piping has been hydrotested. If the piping is disturbed after final alignment has been accepted by the user, train alignment shall be re-checked and approved by the user. If equipment movement was not monitored during the piping changes, the entire alignment check shall be redone starting with the piping disconnected and the flanges separated.

5.5 Sag

5.5.1 The maximum allowable sag for dial indicator brackets/fixture system used for alignment shall not exceed 0.8 mm per meter (0.8 mils per in.) of span.

5.5.2 Sag shall be measured by the installation contractor and recorded. Each dial indicator and fixture combination to be used during alignment of a given equipment train will be measured for sag prior to equipment alignment.

5.6 Gear Procedures

5.6.1 The gear vendor shall provide the relative change between the at-rest and the operating centerline of the gears. If not given by the gear vendor, Figure F.1 and Figure F.2 may be used to locate the running loaded position of the gear and pinion relative to the bearing clearance. The mechanical movement shall be added to the thermal growth when determining ambient offset.

NOTE Whenever a train with a gear with hydrodynamic bearings is aligned, the shaft lift due to gear reaction forces must be accounted for as well as the thermal growth. The shaft lift of the gear and/or pinion at load within the bearing clearances may be more than the equipment alignment tolerance.

5.6.2 For double helical gears, the axial spacing between the shaft end of the gear and adjacent equipment shall be determined after the gear (low-speed) shaft is set in the center of the thrust bearing float. The pinion is centered axially.

5.6.3 The gearbox is typically considered to be the fixed element. Prior to alignment of coupled equipment to the gear, gear soft-foot and tooth contact pattern and area checks shall be made and approved by the user. Shimming of gears to correct gear contact pattern is not permitted unless approved by the user and the gear vendor. If a shim must be used to adjust gearbox height it shall be a ground shim (spacer) under the entire gearbox support area. Gear tooth contact pattern, contact area, and soft-foot shall be approved by the designated machinery representative after the shim (spacer) is installed.

NOTE Shimming of a gearbox to correct gear contact pattern is usually indicative of a poor/nonlevel gearbox support base or a manufacturing error in the gearbox or a softfoot. Gear tooth contact pattern and area are very important to the life of a gear and must be within the gear vendor's guidelines. Manufacturing tolerances are very close, and relatively small distortion of the gear case during initial installation can significantly reduce gear life.

5.7 Bearing Type

Ambient offset shall account for special case bearing types where running position centerline may deviate significantly from the rest position.

NOTE The type of bearing can significantly alter the running position versus rest position of the shaft centerline. An example of this is a four-pad tilt pad bearing with load between pads.

5.8 Fixed Component

General guidelines for determination of fixed and moveable elements in a train are outlined in 5.8.1 through 5.8.3.

5.8.1 Trains with a gear typically have the gear as the fixed element.

5.8.2 For trains without a gear, the equipment with the most rigid process nozzle shall be considered as the fixed element.

5.8.3 For trains with a motor, the motor shall be the movable element.

5.9 Dowels

5.9.1 Tapered dowels with threaded outer ends shall be used for doweling equipment. Threads are to be used for removing dowels.

5.9.2 With the exception of gearboxes (see 5.9.4), equipment feet for general-purpose trains shall not be doweled unless specified by the user.

5.9.3 When doweling is specified by the equipment manufacturer, the equipment shall be doweled by the installer in accordance with the instructions of the user-designated machinery representative. Dowels shall be installed after final alignment. When operating temperature alignment is to be done by the equipment installer, dowels shall be installed after final hot alignment.

5.9.4 Gears shall be doweled after alignment. Unless otherwise specified by the user or gear vendor, a gear shall be doweled as close as possible to the vertical centerline of the highest speed gear element. When the gear is the fixed element in the equipment train, dowels shall be installed after alignment with the piping connected, but before the equipment train is operated.

5.9.5 The thermal growth in the horizontal and vertical direction shall be included in the calculated alignment for gear trains. This thermal offset shall be calculated from the dowel position in the horizontal direction and from the support position in the vertical direction. For initial alignment, an average temperature of 66 °C (150 °F) may be used for calculation of the ambient offset if there is no information available from the equipment vendor.

Annex A
(normative)

Machinery Installation Shaft Alignment Checklist

Section	Requirements	Name	Date
5.10	**Pre-alignment**		
5.10.1	Pre-alignment meeting held.		
5.10.2	Foundation cured and mounting plate installed.		
5.10.3	Equipment installed and fixed machine centered on holes.		
5.10.4	Coupling hubs runout rim and face readings are 0.05 mm (0.002 in.) or the manufacturer's requirement, whichever is less.		
5.10.5	Initial alignment made and approved by user's representative.		
5.10.6	Grout installed.		
5.10.7	Fixtures and tools on hand. Record sag measurements at clock positions.		
5.10.8	Torque requirements for the hold-down bolts _____.		
5.10.9	Equipment available to lift the movable machine and move it in the horizontal and axial directions.		
5.10.10	The washers are thick enough at the hold-down bolts, and if not, obtain sufficiently thick washer.		
5.10.11	All piping is disconnected.		
5.10.12	Fixed and moveable machine shafts free to turn.		
5.10.12.1	Pump seal locking devices disengaged.		
5.10.12.2	Packing or blocking material removed.		
5.10.12.3	Lubrication provided for bearings.		
5.10.13	Drawings and datasheets available. With complete installation information, including; hub draw, methods, hot/cold offset, and torques.		
5.11	**Alignment Tolerances**		
5.11.1	All piping is disconnected.		
5.11.2	Fixed and movable machine shafts free to turn.		
5.11.3	Movable and fixed machine rotors DBSE or coupling spacer gap length = _____ when set to running position.		
5.11.3.1	Coupling spacer free length = _____.		
5.11.4	DBSE or coupling spacer gap length corrected for thermal growth required = _____ and is within ±0.5 mm (±20 mils) of required DBSE or actual coupling spacer free length for and flex couplings. For gear and elastomeric couplings the requirement is ±1.00 mm (±40 mils).		

Section	Requirements	Name	Date
5.11.4..1	Maximum five shims under any support.		
5.11.4.2	Shims series 300 stainless steel or better material, (not laminated) and flat to $^{1}/_{1000}$ in. At least 3 mm (0.125 in.) but not more than 12 mm (0.5 in.) under movable machine foot. Not more than one 3 mm (0.125 in.) thick shim under any foot.		
5.11.4.3	Shims and spacers are full bearing.		
5.11.4.4	Bolts are not undercut.		
5.11.4.5	Washers are not lock washers and do not yield when hold-down bolts are tightened.		
5.11.4.6	Record the hold-down bolt size, acceptance of the minimum clearance, the required bolt torque and any required “expansion gap” value (for movable feet).		
5.11.4.7	Hold-down bolts tight to manufacturer’s/user’s instructions.		
5.11.4.8	Soft-foot is not more than 0.05 mm (0.002 in.) at the hold-down bolt.		
5.11.4.9	Sag of alignment fixture recorded _____ and no more than 0.8 mm per m (0.8 mils per in.).		
5.11.5	Alignment within tolerance (see 5.4.6) before pipes and conduit attached.		
5.11.6	Pipe strain checks made in accordance with procedure in Chapter 6.		
5.11.7	Alignment within tolerance (see 5.4.6) after pipes and conduit attached. Actual datasheets and alignment achieved attached or turned over to the equipment user (see 5.3.1 and 5.3.2). This must include both the raw data and the sag compensated data and both clearly indicate orientation of the data to a common fixed reference/position.		
Equipment Identification Number:			
Alignment Inspector:		**Date:**	

Annex B
(informative)

Reverse Rim Dial Datasheet

Project Number: _____

Plant: _____ **Unit: _____**

Movable: **Item: _____** **Manufacturer: _____**
Type: _____ **Serial No.: _____**

Fixed: **Item: _____** **Manufacturer: _____**
Type: _____ **Serial No.: _____**

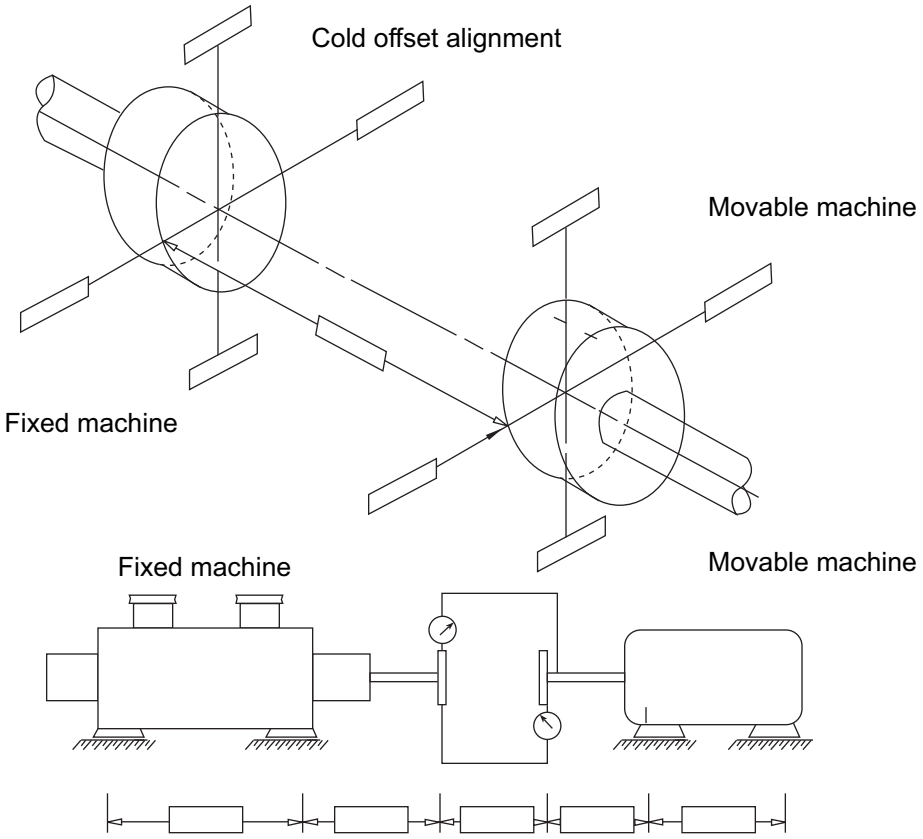

Prepared by: _____ Date: _____

Project Number: _____

Plant: _____ **Unit: _____**

Movable: **Item: _____**
Type: _____

Fixed: **Item: _____**
Type: _____

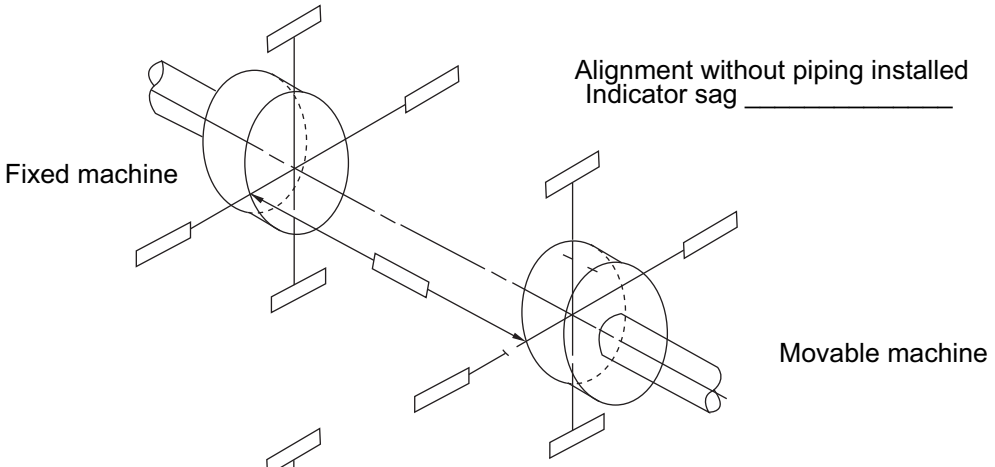

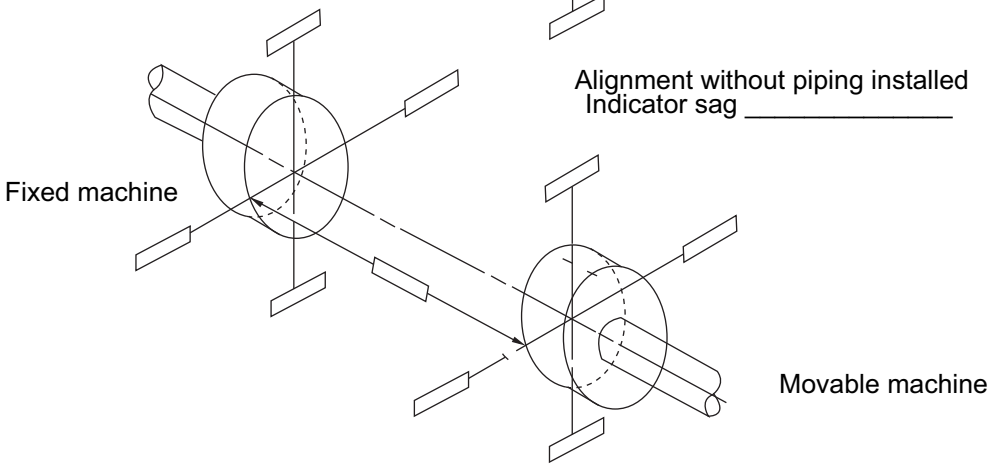

<u>Shims Tabulation</u>

Fixed IB Left	_____	**Move. IB Left**	_____
Fixed IB Right	_____	**Move. IB Right**	_____
Fixed OB Left	_____	**Move. OB Left**	_____
Fixed OB Right	_____	**Move. OB Right**	_ _____

NOTE All shims are recorded looking to the fixed machine from the movable machine.

Witnessed by: _____ Date: _____

Annex C
(informative)

Rim and Face Datasheet

Project Number: _____

Plant: _____ Unit: _____

Movable: Item: _____ Manufacturer: _____

Type: _____ Serial No.: _____

Fixed: Item: _____ Manufacturer: _____

Type: _____ Serial No.: _____

Indicator bar sag: _____ Indicator bar number: _____

Rim Readings

Set proper face readings before taking rim readings

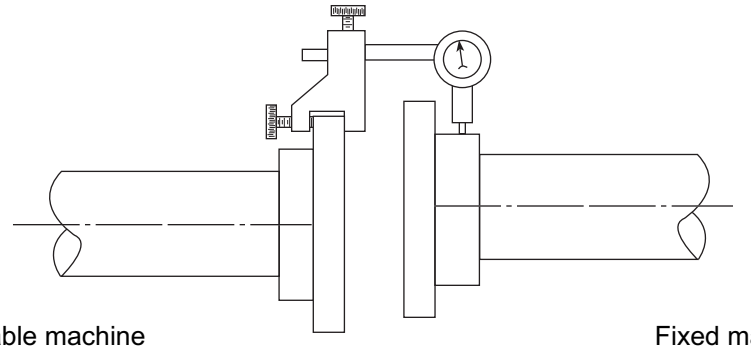

Movable machine Fixed machine

Swept diameter X _____

D = Axial distance between shaft hubs X _____

INDICATOR READINGS: “Left” and “Right” indicator readings are determined by looking from the back of the movable machine toward the fixed machine.

THEORETICAL and Tolerance	ACTUAL (PIPE OFF) Corrected for Axial Float	ACTUAL (PIPE ON) Corrected for Axial Float
Top ____	Top ____	Top ____
Left ____ Right ____	Left ____ Right ____	Left ____ Right ____
Bottom ____	Bottom ____	Bottom ____

Prepared by: _____ **Date:** _____

Project Number: _____

Movable: Item: _____
Type: _____
Fixed: Item: _____
Type: _____

Indicator bar sag: _____ Indicator bar number: _____

Face Readings

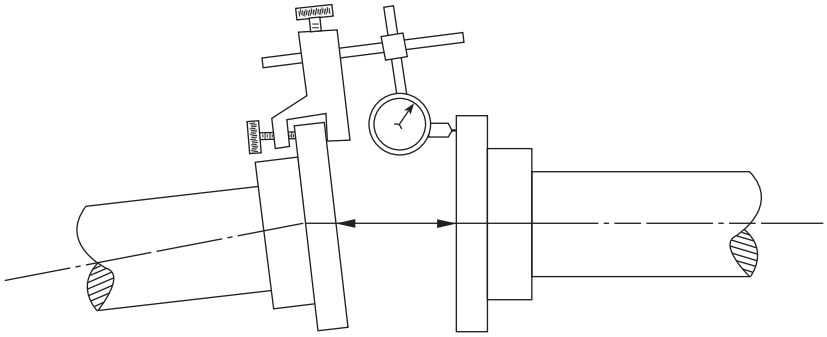

Movable Machine Fixed Machine

INDICATOR READINGS: “Left” and “Right” indicator readings are determined by looking from the back of the movable machine toward the fixed machine.

THEORETICAL and Tolerance	ACTUAL (PIPE OFF) Corrected for Axial Float	ACTUAL (PIPE ON) Corrected for Axial Float
Top _____	Top _____	Top _____
Left _____ Right _____	Left _____ Right _____	Left _____ Right _____
Bottom _____	Bottom _____	Bottom _____

Shims Tabulation

Fixed IB Left	_____	**Move. IB Left**	_____
Fixed IB Right	_____	**Move. IB Right**	_____
Fixed OB Left	_____	**Move. OB Left**	_____
Fixed OB Right	_____	**Move. OB Right**	_ _____

NOTE All shims are recorded looking to the fixed machine from the movable machine.

Witnessed by: _____ Date: _____

Annex D
(informative)

Types of Alignment

D.1 Reverse Rim (Dial) Alignment

D.1.1 Reverse rim (dial) alignment is the process of determining the misalignment of two adjacent rotating machinery elements by radial dial indicator readings taken on the coupling hub rim or shafts of two machines while they are rotated at the same time (see Figure D.1). The key aspect is that the dial indicators are rotated about the machinery shaft's center of rotation. The process is normally done while turning both shafts together and taking readings as close as possible to vertical and horizontal planes.

D.1.2 Advantages and Disadvantages

D.1.2.1 Advantages

D.1.2.1.1 Most maintenance personnel are familiar with this alignment method.

D.1.2.1.2 By spanning a spacer coupling, angular misalignment measurements are more sensitive. A span of 400 mm (16 in.) gives angular misalignment readings four times more sensitive than face readings of a typical 100 mm (4 in.) diameter hub. Most couplings for new equipment in petrochemical facilities have spacers much longer than the hub diameter.

D.1.2.1.3 The requirement to remove the coupling spacer is eliminated with proper design of the alignment brackets. This reduces wear and tear on the coupling.

D.1.2.1.4 When both shafts are turned together, the errors of coupling hub runout are eliminated. It is also possible with care to achieve equal accuracy with the shafts uncoupled. For new installations it is recommended that the coupling spacer be left out to reduce the wear and tear on the coupling and bolts. At construction sites, it is likely the coupling spacer or fasteners will be lost or damaged if the coupling is assembled and subsequently removed. The equipment train driver shall be positively prevented from inadvertent energization before the coupling spacer is installed.

D.1.2.1.5 Axial float errors are eliminated by eliminating the face readings.

D.1.2.1.6 It lends itself to both graphical and calculated methods of alignment correction.

D.1.2.1.7 There are several general-purpose reverse dial indicator shaft adapter kits commercially available. Generally these commercially available kits are designed for minimum sag.

D.1.2.2 Disadvantages

D.1.2.2.1 Both machines must be turned to align them unless special brackets are made. Accurate repeatable readings are difficult to obtain.

D.1.2.2.2 Indicator sag must be measured and included in the calculations.

D.1.2.2.3 To be done properly, brackets must be made to fit the machinery train correctly and still swing the shafts together 360 degrees without interference.

D.1.2.2.4 Purchasing commercial or manufacture reverse dial indicator brackets can be costly.

D.1.2.2.5 It is not as accurate for equipment where coupling diameter is greater than DBSE length.

D.1.2.2.6 Any hub surface disconformity in the mechanically indicated surfaces must be compensated for when rotating only one shaft at a time.

D.2 Rim and Face Alignment System

D.2.1 Rim and face alignment is the process of determining misalignment between two adjacent shafts by measuring the differences in DBSE or coupling faces (face readings) and the difference in the center of rotation with dial indicator radial readings (rim readings). The angular misalignment is determined by the face readings, and the parallel misalignment at the dial is determined by dial indicator readings in the radial direction on the rim of the coupling or shaft. Relative face distance is determined at two points in the vertical direction and two points in the horizontal direction. This may be done by micrometer, or dial indicator. Rim readings (two in the horizontal plane and two in the vertical plane) are taken with a dial indicator mounted on a bracket fixed to one shaft. When possible, both shafts are rotated together. Three dial rim and face readings, as shown in Figure D.2, should be used whenever practical.

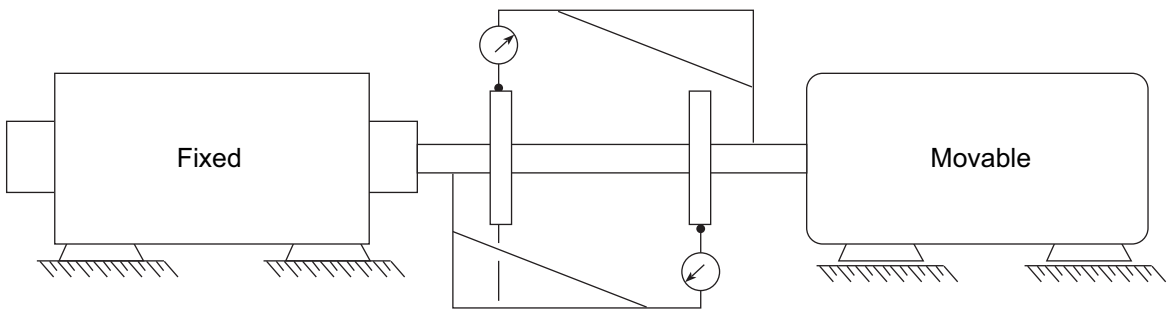

Figure D.1—Reverse Rim (Dial) Alignment

D.2.2 Advantages and Disadvantages

D.2.2.1 Advantages

D.2.2.1.1 It is more accurate than double reverse dial when the machinery train is close coupled and the dial indicator span is less than the coupling hub diameter.

D.2.2.1.2 The face readings give the angularity and the rim readings give the offset at the dial indicator. This is intuitive to most mechanics and millwrights and easier to understand than reverse dial (rim) alignment.

D.2.2.1.3 Dial indicator rim and face readings only require one shaft to be rotated. This should only be done when necessary because dimensional errors in hubs or shaft ends will cause an error in the readings.

D.2.2.1.4 Any hub surface disconformity in the mechanically indicated surfaces must be compensated for when rotating only one shaft at a time.

D.2.2.2 Disadvantages

D.2.2.2.1 Unless the three dial rim and face method is used to subtract shaft end-play, it is likely to give erroneous face readings as the shaft is rotated.

D.2.2.2.2 Rim readings must be corrected for sag.

D.2.2.2.3 For machinery with spacer couplings, the face readings do not have as good resolution as reverse dial readings. Most equipment specifications require coupling spacers of 5 in. or more for ease of maintenance and to reduce the coupling alignment change from cold to hot operation.

D.3 Laser Alignment Systems

D.3.1 General

D.3.1.1 Laser alignment is the process of determining misalignment by a laser beam where the laser is mounted on one or both shafts and a receiver or reflector is mounted on the other. Both shafts are turned at the same time. The deviation in the laser beam is measured as the shaft is turned. The interpretation of the data is done by configuring an alignment computer supplied with the laser alignment system.

D.3.2 Advantages and Disadvantages

D.3.2.1 Advantages

D.3.2.1.1 The calculations are directly fed into the alignment computer by the instrument, eliminating operator errors.

D.3.2.1.2 Potential accuracy of laser instruments is better than dial indicators.

D.3.2.1.3 The required moves and actual misalignment in the horizontal and vertical plane or angle is directly read out.

D.3.2.1.4 There is no sag in the readings. Very good for long DBSE alignments.

D.3.2.1.5 Universal brackets are provided for the instrument, which allows for setup on most machines without special fabrications.

D.3.2.1.6 There is a relatively short training period for new mechanics (millwrights) in order to become proficient in machinery alignment.

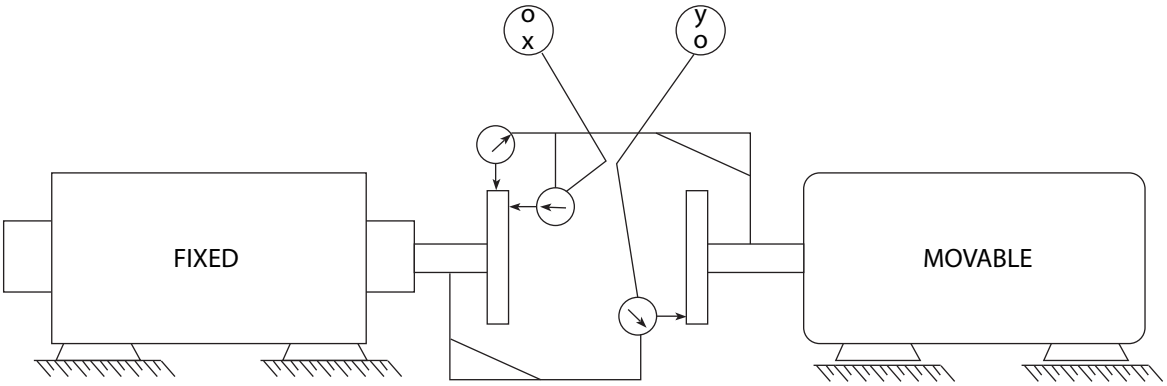

$$\text{Face Displacement} = X - \left(\frac{X+Y}{2}\right)$$

Figure D.2—Three Dial Rim and Face Alignment

D.3.2.1.7 The laser alignment equipment normally provides a printout of the alignment for record purposes. This eliminates translation errors and provides consistency from one mechanic (millwright) to the next.

D.3.2.2 Disadvantages

D.3.2.2.1 The initial cost is relatively high and mechanics (millwrights) must be trained to use the laser alignment equipment.

D.3.2.2.2 The mechanic (millwright) does not get the feel for the actual alignment process because dial indicator calculations or graphs are eliminated. It is recommended that laser alignment only be done by persons familiar with dial indicator alignment.

D.3.2.2.3 The mechanic (millwright) must be sure the instrument is suitable for the area classification or obtain a safety permit.

D.3.2.2.4 Vibration of the machinery can cause the instrument to be nonfunctional.

D.3.2.2.5 Both shafts must be turned or special jigs provided to align equipment where the shaft cannot be turned.

D.4 Operating Temperature Alignment

D.4.1 General

D.4.1.1 Operating temperature alignment is the process of determining the relative change in alignment from the ambient conditions to operating conditions.

D.4.2 Operating Temperature Alignment Systems

The generally recognized systems for hot alignment of rotating equipment trains are described in D.4.2.1 to D.4.2.5.

D.4.2.1 A frequently used type of operating temperature alignment for hot service pumps is to back-flow hot fluid through a pump while it is not in service. The change in alignment is monitored from the ambient condition to the hot condition. This is not usually as accurate as other methods where the equipment is in operation (as listed in D.4.2.2 through D.4.2.5) but is often sufficient for many general-purpose pumps.

D.4.2.2 Alignment indicator stands are set up with a constant temperature coolant flowing through them. The readings are taken with dial indicators or proximity probes on machined surfaces attached to the bearing brackets. The change in the dial indicators or proximity probe gap is measured as the machinery train is operated at normal conditions. These measurements are used to verify ambient offset readings.

D.4.2.3 Accurate measurements are made between fixed benchmarks located on the machinery train bearing brackets and the foundation when the equipment is not running. The equipment is then started and run at operating conditions and the measurements are repeated. The relative change in the measurements are related back to ambient condition alignment readings.

D.4.2.4 Optical operating temperature alignment is similar to the physical measurement of benchmarks, except precision optical readings are taken of benchmarks when the machine is at ambient conditions and after it is put in service.

D.4.2.5 Low sag brackets with four proximeter probes are attached inside the coupling cover to the bearing housing. The relative change is related directly back to initial proximeter readings and reverse dial indicator readings taken when the machinery train was at ambient conditions.

Annex E
(informative)

Hold-down Bolt Torque Tables

Table E.1—30,000 psi Internal Bolt Stress

Nominal Bolt Diameter (in.)	**Number of Threads** (per in.)	**Torque** (ft-lb)	**Compression** (lb)
1/2	13	30	3780
5/8	11	60	6600
3/4	10	100	9060
7/8	9	160	12,570
1.0	8	245	16,530
1 1/8	8	355	21,840
1 1/4	8	500	27,870
1 1/2	8	800	42,150
1 3/4	8	1500	59,400
2.0	8	2200	79,560
2 1/4	8	3180	102,690
2 1/2	8	4400	128,760
2 3/4	8	5920	157,770
3.0	8	7720	189,720

NOTE 1 All torque values are based on anchor bolts with threads well-lubricated with oil (NOT anti-seize compound). The use of anti-seize compounds will reduce these torque values.

NOTE 2 In all cases the elongation of the bolt will indicate the load on the bolt.

Table E.2—2110 kg/cm Internal Bolt Stress

Nominal of Bolt Diameter (mm)	**Torque** Newton-Meters	**Compression** (lb)
M12	31	1778
M16	110	3311
M24	363	7447
M30	1157	18,247
M52	3815	37,136

NOTE 1 All torque values are based on anchor bolts with threads well-lubricated with oil (NOT anti-seize compound). The use of anti-seize compounds will reduce these torque values.

NOTE 2 In all cases the elongation of the bolt will indicate the load on the bolt.

Annex F
(informative)

Gearbox Shaft Movement

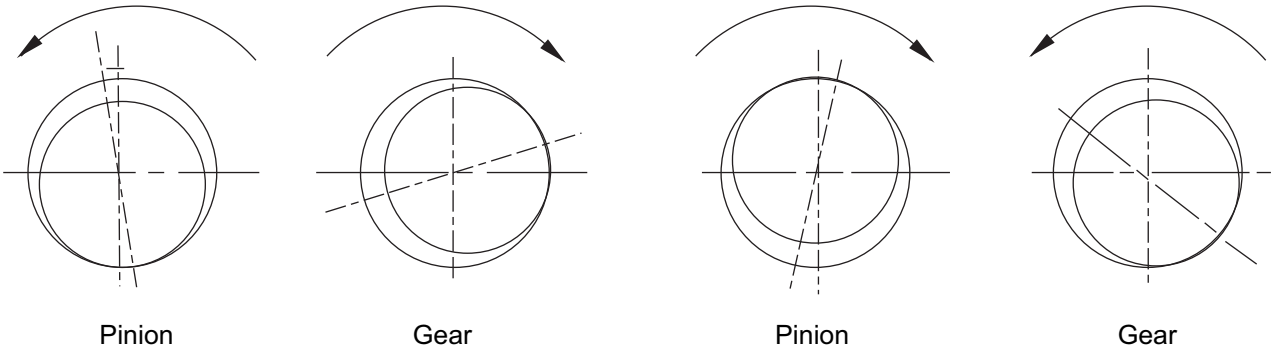

Figure F.1—Pinion Driving (Gear Driven)

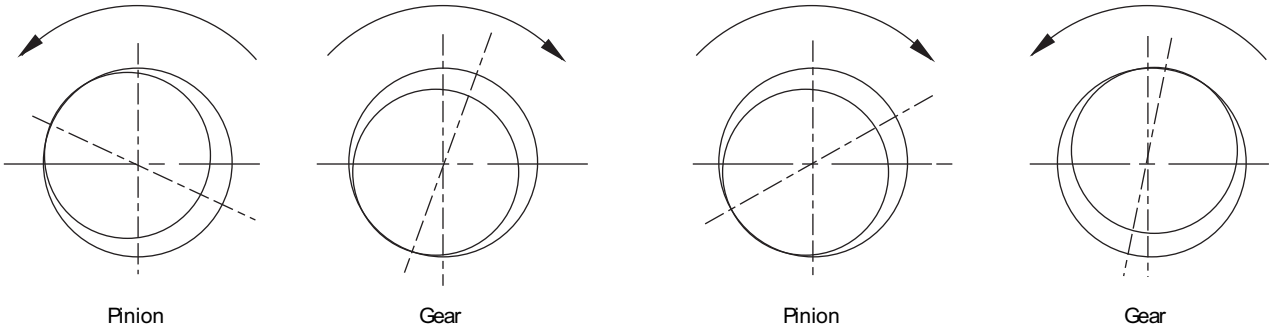

Figure F.2—Pinion Driven (Gear Driving)

Recommended Practice for Machinery Installation and Installation Design

Chapter 8—Lubrication Systems

Downstream Segment

API RECOMMENDED PRACTICE 686
SECOND EDITION, DECEMBER 2009

American Petroleum Institute

Contents

Page

1 Scope 8-1

2 Definitions 8-1

3 System Design Requirements 8-3

4 Lubrication System Installation 8-4
4.1 Receiving and Protection 8-4
4.2 Temporary Oil Mist Systems 8-4
4.3 Cleaning 8-5
4.4 Mechanical Cleaning of Piping 8-6
4.5 Chemical Cleaning of Carbon Steel Piping Systems 8-6
4.6 Flushing of Oil Systems 8-7
4.7 Final Assembly 8-8
4.8 Preparation Checks for Oil System 8-9

Annex A (normative) **Lube Oil Systems Installation and Installation Design Checklist** 8-10

Recommended Practice for Machinery Installation and Installation Design
Chapter 8—Lubrication Systems

1 Scope

1.1 This chapter of API 686 establishes the minimum requirements for the machinery installation design, preservation, installation, and cleaning of new or overhauled machinery that either provides or requires lubrication for process or utility purposes (refer to API 614 for lube oil and seal oil system requirements).

1.2 Equipment providing lubrication includes equipment such as lube and seal oil systems, central air/oil systems, and oil mist lubrication packages systems.

1.3 Equipment requiring lubrication includes (as a minimum) equipment such as vertical and horizontal centrifugal and positive displacement pumps, centrifugal and positive displacement compressors, blowers, fans, agitators, horizontal and vertical gearboxes, steam and gas internal combustion turbines, expanders, electric motors, electric generators, and packages such as refrigeration packages, plant instrument air packages, and extruders.

1.4 This chapter is not a design specification. However, design criteria that enhance and/or facilitate the preservation, cleaning, inspection, assembly, installation and start-up of lubrication systems and details such as bearing cavities, bearing housings, and complete lube and seal oil supply systems are included. This section of API 686 does not include criteria for product lubricated equipment such as canned motor pumps, grease-lubricated equipment, or cylinder lubrication such as for reciprocating compressors.

1.5 All design and installation requirements shall be ensured as being complete by completing the installation checklist in Annex A and submitting it to the user or his designated representative.

2 Definitions

For the purposes of this document, the following standard definitions apply.

2.1
designated machinery representative
The person or organization designated by the ultimate user of the equipment to speak on his/her behalf with regard to machinery installation decisions, inspection requirements, and so forth. This representative may be an employee of the user, a third party inspection company, or an engineering contractor as delegated by the user.

2.2
engineering designer
The person or organization charged with the project responsibility of supplying installation drawings and procedures for installing machinery in a user facility after machinery has been delivered. In general, but not always, the engineering designer specifies machinery in the user facility.

2.3
equipment installer
The person or organization charged with providing engineering services and labor required to install machinery in a user facility after machinery has been delivered. In general, but not always, the installer is the project construction contractor.

2.4 equipment train
Two or more rotating equipment machinery elements consisting of at least one driver and one driven element joined together by a coupling.

2.5
equipment user
The organization charged with operation of the rotating equipment. In general, but not always, the equipment user owns and maintains the rotating equipment after the project is complete.

2.6 oil mist
A dispersion of oil droplets, of 1 to 3 micron size in an air stream.

2.7
oil mist application fittings
Long path orifices that cause the small oil droplet size in the header ("dry mist") to be converted to larger size oil droplets ("wet mist") to lubricate the bearings. Oil mist application fittings are also known as reclassifiers.

2.8
oil mist console
A system consisting of the oil mist generator, oil supply system, air filtering system, oil mist header outlet, and necessary controls and instrumentation. Air and oil enter the console to produce oil mist.

2.9
oil mist distributor block
A small rectangular block that has four or more holes drilled and tapped in opposite faces. Drop points terminate in distributor blocks. An oil mist distributor block may also be described as an oil mist manifold block.

2.10
oil mist generator
A device located inside the oil mist console that combines oil and air to make oil mist. Typical oil mist generators utilize a venturi to achieve mixing of the oil and the air.

2.11
oil mist header
A network of piping through which the oil mist is transported from the console where it is made to the machinery bearing housing where it is used.

2.12
oil mist lubrication
Lubrication systems that employ oil mist produced by atomization in a central unit and transported to a remote bearing housing, or casing, by compressed air.

NOTE This system consists of the oil mist console, distribution piping headers and laterals, application fittings, and the lubricant supply tank and pump.

2.13
oil mist lubrication system
A system designed to produce, transport, and deliver oil mist from a central location to a remote bearing housing. This system consists of the oil mist console, distribution piping headers and laterals, application fittings, and the lubricant supply tank and pump.

2.14
pure mist
The application of oil mist to a machinery bearing housing to lubricate antifriction bearings. The oil mist passes through the bearing elements, and oil droplets coalesce out of the air stream. All oil is drained from the machinery bearing housing and complete lubrication is provided by the mist alone. Pure mist may also be described as dry sump lubrication.

2.15
pure oil mist lubrication
dry sump
The application of oil mist to a machinery bearing housing to lubricate anti-friction bearings. The oil mist passes through the bearing elements and oil droplets coalesce out of the air stream. All oil is drained from the bearing housing and the mist alone provides complete lubrication.

2.16
purge mist
The application of oil mist to a machinery bearing housing or reservoir to provide a slight positive pressure. Machinery lubrication is provided by the normal ring oil or submerged bearing lubrication. This prevents contamination that could be caused by infiltration of corrosive agents or condensation of ambient moisture. Purge mist may also be described as wet sump mist lubrication.

2.17
purge oil mist lubrication
wet sump
The application of oil mist to a machinery bearing housing or reservoir to provide a slight positive pressure. Machinery lubrication is provided by the conventional ring oil or submerged bearing lubrication. This prevents contamination that would be caused by infiltration of corrosive agents or condensation of ambient moisture.

2.18
user
The final recipient of the equipment who may delegate another agent as the purchaser of the equipment.

3 System Design Requirements

3.1 The design shall provide for easy access to fill and drain connections and provide easy access for operation and maintenance.

3.2 The design shall provide for drains that drain the components and systems as completely as practical without leaving the need for flushing the remainder.

3.3 The design shall provide for adequately sized and properly placed vents and drains to ensure complete removal of any material used during chemical cleaning and pickling.

3.4 The design shall provide for fill and drain passages and connections that are sufficient in size and oriented such that servicing can be performed without spilling and does not require special equipment.

3.5 The piping system shall be provided with high point vents and low point drains.

3.6 On equipment with circulating oil systems, the piping design shall be provided with break-out spools for jumpers on the supply and return connections to each lubrication point on the machine to facilitate flushing of the oil system.

3.7 The design of the lubrication system shall achieve the following:

a) proper support and protection to prevent damage from vibration or from shipment, operation, and maintenance;

b) proper flexibility and normal accessibility for operation, maintenance, including filling and draining, and thorough cleaning;

c) installation in a neat and orderly arrangement adapted to the contour of the machine without obstructing access to such items as junction boxes, couplings, instrumentation, etc.;

d) elimination of air pockets by the use of valved vents or non-accumulating piping arrangements; and

e) complete drainage through low points without disassembly of piping, vacuuming or flushing.

3.8 Threaded openings (such as in small pumps) may be plugged with a threaded pipe plug; others shall be provided with block valves and flanged connections with blind flanges.

3.9 Tapped openings shall be plugged with solid, round-head steel plugs furnished in accordance with ASME B16.11. As a minimum, these plugs shall meet the material requirements of the piping system. Plugs that may later require removal shall be of corrosion-resistant material. A sealant that meets the proper temperature specification shall be used on all threaded connections. Tape shall not be applied to the threads of plugs or any other threaded connection inserted into oil passages. Plastic plugs are NOT permitted. Flanged openings shall be provided with block valves and blind flanges.

3.10 A specific lube oil flushing diagram shall be provided that clearly indicates temporary bypasses, screens, drop-out spools and so forth, required for lube oil flushing. A marked-up process and instrumentation diagram will suffice for this purpose.

3.11 Component and system cleaning specifications, including the flushing diagram, shall be approved by and agreed upon between the manufacturer and user.

3.12 Equipment and oil systems shall be shipped clean, minimizing the need for cleaning and flushing in the field. The manufacturer shall demonstrate that oil passages and oil-containing components are free of dirt and debris prior to shipment.

3.13 In situations where oil mist is used to protect equipment during storage or when the equipment is idle, procedures and oil mist system design and arrangement shall be agreed upon between the manufacturer and the user.

4 Lubrication System Installation

4.1 Receiving and Protection

4.1.1 In the event that the lubrication system or equipment will not operate within six months, a long-term preservation program shall be agreed upon between the vendor and equipment user. The program shall clearly state the responsibilities of the individual parties.

4.1.2 An inspection procedure shall be established indicating intervals and special activities to be performed, such as equipment condition, inspection, preservation, and shaft rotation while the equipment is idle (refer to Chapter 3 of this RP).

4.1.3 The manufacturer's/vendor's instructions shall be followed unless otherwise specified. These instructions shall be agreed upon between equipment user and vendor.

4.1.4 Any conflicts between this recommended practice (RP) and/or the manufacturers' recommended procedures shall be referred to the user-designated machinery representative for resolution before proceeding.

4.1.5 The equipment shall be protected against mechanical damage and internal and external corrosion at all times. When specified, a temporary oil mist preservation system shall be provided in accordance with 4.2.

4.2 Temporary Oil Mist Systems

4.2.1 When 10 or more pieces of equipment are to be stored for a period longer than six months from time of receiving, an oil mist protection system should be considered.

4.2.2 Oil mist should be used to protect the bearings, bearing housings, seal areas, and any other unprotected internal area, and when feasible, the process end of the equipment.

4.2.3 For equipment provided with permanent mist lubrication connections, these connections shall be used in conjunction with the temporary oil mist system.

4.2.4 Equipment cavities not normally mist lubricated during permanent operation, must be fitted with mist supply and vent connections, typically NPS 1/4.

4.2.5 The oil mist system must be designed and sized for preservation service. Mist flow to each application point may be less than that required for lubrication during normal operation.

4.2.6 The mist generator shall be equipped with an air pressure regulator, pressure relief valve, level gauge, and mist pressure gauge instrumentation as a minimum.

4.2.7 The mist header should be NPS 2 galvanized schedule 40 pipe supported and sloped at a minimum of 2 cm per 5 m (1 in. per 20 ft) back to the mist generator. Greater slope is acceptable.

4.2.8 Plastic tubing may be used to connect the mist header to the mist application point.

4.2.9 The equipment should be connected to the system within 24 hours after arrival on the storage or plant construction site to protect equipment against internal and external corrosion as prescribed and agreed upon by the equipment vendor and the equipment user.

4.2.10 The compatibility of preservatives and sealants with process streams and machinery components must be evaluated by the user-designated machinery representative.

4.2.11 Unless otherwise specified by the user's designated representative, oil used in the mist system should be a good quality, paraffin-free turbine oil. A temperature-sensitive, vapor-emitting oil should not be used.

4.2.12 Equipment under preservation must be maintained by rotating shafts and periodically draining condensed oil from the cavities.

WARNING—Shafts supported by hydrodynamic (sleeve) bearings should not be rotated without injecting suitable oil into the bearings—oil mist may not be adequate for even rotation of such bearings by hand.

4.2.13 Under no circumstances should a machine be rotated without the specific approval of the manufacturer's representative and/or the user-designated machinery representative.

4.2.14 Drained oil must be disposed of per the equipment user's established environmental protection procedures.

4.2.15 Interruption of oil mist preservation, such as during transport of equipment from storage to the construction site, should be minimized.

4.2.16 Oil mist preservation (or other preservation procedures) must be immediately re-established once the equipment is placed on its foundation.

4.3 Cleaning

4.3.1 It cannot be overemphasized that the cleanliness of the lube oil system is crucial to the operational reliability of the process equipment and the lube oil supply system. It is also very time consuming to clean the system once assembled and ready for operation.

4.3.2 The equipment installer and equipment user shall determine and agree on the locations where temporary bypasses, screens, and so forth, shall be located. Temporary bypasses, screens, and so forth, shall be located and installed per the flush diagram agreed upon during the installation design phase. Unless specifically approved by the user-designated machinery representative, no circulation of any material shall take place through the bearings as long as the bearing area and the system are not proven to be clean by means of the cleanliness test described below.

4.3.3 All interconnecting piping shall be thoroughly cleaned before it is installed by blowing large quantities of steam, air, or nitrogen through the piping or by flushing the piping with a solvent approved by the user. Care must be exercised to ensure that the pre-cleaned interconnecting piping is kept clean during its installation.

4.3.4 Flow restrictions such as orifices and probes must be removed to obtain optimum velocities during the cleaning and subsequent flushing procedures. All equipment removed shall be tagged and inventoried for later reinstallation into its proper location.

4.4 Mechanical Cleaning of Piping

4.4.1 All loose foreign material such as scale, sand, weld splatter particles, and cutting chips shall be removed from the inside of piping assemblies and reservoirs, filter housings, and so forth.

NOTE Hammering on the outside of piping with a non-marring hammer will aid in freeing weld splatter, scale, dirt, and rust.

4.4.2 Where accessible, the inside of piping should be wire brushed.

CAUTION—Do not brush stainless steel pipe with a carbon steel brush.

4.4.3 Pipes must be blown out with steam or clean dry air after hammering and brushing. When steam or high-pressure water washing is performed, subsequent blowing with clean dry air or nitrogen is required.

4.4.4 On piping where satisfactory cleaning by mechanical means alone is in doubt, additional chemical cleaning or hydroblasting methods should be considered.

4.5 Chemical Cleaning of Carbon Steel Piping Systems

4.5.1 Chemical cleaning applies only to carbon steel pipe. Stainless steel pipe could be damaged by pickling solutions and, therefore, should only be cleaned with approved solvents or steam.

NOTE Chemical cleaning or pickling can best be performed by service companies specializing in the cleaning of old and new piping. Construction contractors are typically not equipped to perform this procedure.

4.5.2 Flushing materials containing chlorinated hydrocarbons such as 1,1,1 trichloroethane should not be used in carbon steel piping systems with stainless steel components as this can result in chloride stress corrosion cracking of the stainless steel components.

4.5.3 Warning tags should be installed on components such as oil pumps and control valves, which are isolated from the piping during chemical cleaning.

4.5.4 Where chemical cleaning or pickling is required, the following typical procedure may be used.

a) To follow the progress of cleaning, representative “dirty” metallic coupons should be installed at several strategic locations. The coupon presence shall be clearly indicated on the outside of the piping system for later removal after the cleaning procedure is complete.

b) A 2 % caustic solution (in water) should be circulated at 80 °C to 90 °C (175 °F to 195 °F) to remove oil and grease-type protective films that may be in the equipment.

c) Approximately three hours of circulation is required to adequately remove preservative films. Sufficient flushing velocities must be created to properly remove foreign materials from the piping passages.

d) The system must then be drained and flushed with clean water and blown with air or steam to remove any pockets of solution that may remain.

e) The system is then filled with a citric acid solution containing approximately 10 kg (20 lb) of acid per 400 liters (100 gal) water. The solution should be maintained at a temperature of 80 °C to 90 °C (180 °F to 190 °F) and circulated for a minimum of two hours. The initial circulating solution should have an acidity of approximately pH 3. Test coupons should be checked to ensure that they are clean before stopping the circulation. After the test coupons indicate a clean system, ammonia is added in a sufficient quantity to bring the acidity up to pH 8.0 and circulated for approximately 30 minutes.

NOTE This procedure both neutralizes and passivates the system.

f) A final passivation with a 0.25 weight percent caustic plus 0.25 weight percent soda ash (or nitrox passivator) in water should be performed. The system must then be drained and blown dry with nitrogen or clean filtered air.

g) The system must then be verified that the chemical cleaning process was adequate.

h) If the system is not ready for immediate oil flushing, then a nitrogen purge shall be established to protect the chemically cleaned surfaces.

4.6 Flushing of Oil Systems

4.6.1 It is the intent of this RP that equipment and oil systems are in a clean condition when received from the manufacturer, requiring minimal flushing after installation. If the equipment is known to be dirty, it may be cost-effective to use a less expensive flush oil that will be discarded after flushing.

4.6.2 After cleaning (mechanical and/or chemical), and only when the system is considered completely dry, the filter elements shall be reinstalled. Temporary bypasses, screens, and so forth, shall be located and installed per the flush diagram agreed upon during the installation design phase Temporary bypass piping shall also be installed around all equipment bearings and shaft-driven lube oil pump if applicable.

4.6.3 For the protection of centrifugal pumps during flushing and for the initial operation of new oil systems, a removable strainer that is made from ASTM Series 300 stainless steel and has an minimum open flow area equal to 150 % of the cross-sectional area of the suction pipe shall be installed in the suction piping of each pump between the pump suction flange and the block valve. The temporary strainer shall be identified by a protruding tab and shall have a mesh size adequate to stop all objects that could damage the pump. The piping arrangement shall permit the removal of the strainer without disturbing the alignment of the pump. The maximum strainer hole size shall be 3 mm ($^1/_8$ in.). Cone strainers shall be installed in spool pieces to minimize piping removed.

NOTE Strainer can be cone, basket, or Y-type. For typical ASME and API pumps, a mesh size of 500 is sufficient. For canned, screw, and magnetic drive pumps, a 100 to 200 mesh screen is required.

4.6.4 The system should be filled with lubricating oil, of the same type and grade as will be used in operation. If applicable, and if feasible, each pump shall be operated. Operation of parallel pumps at the same time may aid in dislodging solid contaminants. The temperature of the oil should be alternated between 40 °C (100 °F) and 70 °C (160 °F) every four hours. Using reservoir heaters may assist in this process.

NOTE 1 Sparging the flushing oil with nitrogen, “hammering” the fittings, using mechanical vibrators, and cycling oil temperature are ways of loosening dirt particles.

NOTE 2 Heating and cooling can be obtained by alternate circulation of hot water (not steam) and cold water through the cooler(s). The thermal expansion and contraction will help to loosen any residue in the pipe. The piping should be tapped with a non-marring hammer at all flanges and welds to assist in loosening any weld spatter or pipe scale.

NOTE 3 Care must be exercised in this procedure to not exceed the temperature design limitations of the oil cooler, as damage could occur.

NOTE 4 Oil must be filtered (10 micron or better) as it is filled into the reservoir.

NOTE 5 Special booster or other specific flush pumps may have to be used to achieve the velocities required in the piping to facilitate effective flushing

4.6.5 Oil flows must be manipulated to achieve complete and effective flushing of all piping and equipment. An objective of good flushing is to establish high-velocity turbulent flow in all piping and equipment. This cannot be done in the complete system at any one time, so valving must be selectively and periodically manipulated to ensure high-velocity flow through each control valve, bypass line, and auxiliary item.

4.6.6 Replace the oil filter elements if there are signs of plugging or when the differential pressure rises more than 1 kg per cm^2 (15 psid) (or as specified by the manufacturer) above the original clean filter reading.

NOTE Consideration should be given to utilizing an outside contractor for large oil piping systems to achieve adequate flow velocity.

4.6.7 Circulate at 12-hour intervals and check for system cleanliness. The procedure for circulation and checking for cleanliness shall be repeated until the vendor and/or the designated machinery representative are satisfied with the condition of the system. Cleanliness of the oil may be checked at convenient discharge locations with a telltale (such as clean white gauze cloth) as indicated on the lube oil flushing diagram (see 3.10).

4.6.8 Remove all equipment temporary bypass piping and reinstall the permanent oil supply and return piping with temporary 100 mesh screens backed with minimum 20 mesh screens installed just upstream of the bearing housing flange connection(s). Continue flushing the system as previously outlined until an eight-hour flush through a clean set of screens yields no magnetic particles, no particles gritty to the touch, and a negligible dirt count on each screen.

NOTE 1 On large systems, portions of the system proven to be clean do not have to have the screens reinstalled.

NOTE 2 If the screens indicate the system is not clean after one or two such cycles, recleaning of the piping downstream of the filters should be considered.

4.6.9 Under no circumstance should the machine be rotated without the specific approval of the manufacturer's representative and/or the designated machinery representative.

4.6.10 A sample should be taken at the completion of the oil flushing procedure from the reservoir bottom and checked for water content and dirt contamination.

NOTE The presence of any water in the oil system may indicate a cooler leak.

4.6.11 In the event that the lube oil is found to be contaminated with water, the oil is to be processed with an oil reclaimer until clean oil (free of water and particles) is proven; or the contaminated oil shall be removed, the reservoir cleaned, and a fresh charge of clean oil installed.

4.7 Final Assembly

4.7.1 Connect all permanent oil piping as it is designed to operate.

4.7.2 All temporary screens shall be removed from the oil piping, and the permanent gaskets installed.

4.7.3 If possible, the oil pump suction strainer(s) should be cleaned.

4.7.4 All flow orifices and instrumentation previously removed are to be installed and connected as they are designed to operate.

4.7.5 Install new filter element(s).

4.8 Preparation Checks for Oil System

4.8.1 Prior to final operation, the lube oil pump pressure relief valve shall be checked for proper operation and setting. The manufacturer's instruction manual should be referenced for specific setting procedures.

4.8.2 All pressure reducing valves to maintain the design operating oil pressures at the rotating equipment shall be adjusted and set to specification.

NOTE The oil temperature must be allowed to rise to the design operating temperature before setting the oil pressure control valves for the system.

4.8.3 Place the oil system in operation as it was intended to operate and check each branch for proper pressure and flow. Check any sight glasses for quantity and quality (such as foaming) of flow.

4.8.4 Check oil pumps and drivers for excessive vibration or temperature.

Annex A
(normative)

Lube Oil Systems Installation and Installation Design Checklist

Section	Requirements	Name	Date
3	**System Design Requirements**		
3.1	The design provides for easy access to fill and drain connections and easy access for operation and maintenance.		
3.2	Adequate drains provided.		
3.3	Chemical cleaning vents and drains provided.		
3.4	Fill and drain connections of sufficient size and orientation.		
3.5	High point vents and low point drains provided.		
3.6	Break-out spools for flushing jumpers provided.		
3.7 a)	Sufficient piping supports provided.		
3.7 b)	Accessibility for operations and maintenance.		
3.7 c)	Neat and orderly arrangement that does not obstruct access.		
3.7 d)	The design eliminates any air pockets.		
3.7 e)	Complete drainage of systems provided without extraordinary measures.		
3.8	All openings properly sealed.		
3.9	All openings meet the requirements of 3.9.		
3.10	Specific lube oil flushing diagram provided by vendor.		
3.11	Cleaning specifications and flushing diagram agreed upon.		
3.12	Equipment and oil system is shipped clean minimizing the need for field flushing of components.		
3.13	Oil mist procedures agreed upon.		
4	**Lubrication System Installation**		
4.1	**Receiving and Protection**		
4.1.1	Inspection, preservation, rotation procedure established.		
4.1.2	Long-term preservation program agreed upon by user and vendor.		
4.1.3	Vendor/user agreed on instructions for installation, oil mist preservation system (if applicable), cleaning and flushing were followed.		
4.1.4	Proper mechanical and corrosion protection provided at all times.		
4.2	**Temporary Oil Mist Systems**		
4.2.1	Oil mist protection system required?		
4.2.2	Oil mist system sufficient and placed at all required locations.		
4.2.3	Permanent oil mist connections utilized where provided.		
4.2.4	Temporary oil mist connections provided where required.		
4.2.5	Oil mist system designed and sized for preservation service.		
4.2.6	Neccessary instrumentation provided.		
4.2.7	Header slope back to mist generator adequate.		
4.2.9	Equipment connected within 24 hours of receipt.		
4.2.10	Preservative and lubricant compatibilities addressed.		
4.2.12	Equipment under preservation periodically rotated and cavities drained.		
4.2.14	Drained oil properly disposed of.		
4.2.15	Interruption of oil mist preservation minimized.		
4.3	**Cleaning**		
4.3.1	System kept clean throughout construction activities.		
4.3.2	Agreement on physical location of bypasses and screens.		

Section	Requirements	Name	Date
4.3.3	All interconnect piping internally without rust, debris, scale, deposits, weld splatter, and dry.		
4.3.4	Orifices, valves, and similar obstructions removed for cleaning-flushing.		
4.4	**Mechanical Cleaning of Piping**		
4.4.1	All loose foreign material removed from piping and components.		
4.4.2	Carbon steel piping wire brushed where accessible.		
4.4.3	Piping blown clear after mechanical cleaning.		
4.5	**Chemical Cleaning**		
4.5.1	Verified that piping system is carbon steel.		
4.5.2	Chlorinated hydrocarbon flushing fluids not used on carbon steel.		
4.5.3	Warning tags placed on isolated components.		
4.5.4 a)	Pickling and passivating procedure followed.		
4.5.4 g)	Verified adequacy of system cleanliness after chemical cleaning.		
4.5.4 h)	Nitrogen purge applied if required.		
4.6	**Flushing of Oil Systems**		
4.6.1	Verified that system is completely drained and dry before oil fill.		
4.6.2	Clean filters installed for oil flushing. By-passes installed as agreed betwen vendor and user.		
4.6.3	Temporary oil pump suction strainers installed.		
4.6.4	Oil temperature cycled as specified. Operations of both oil pumps in parallel.		
4.6.5	Oil flows manipulated to achieve complete and effective flushing.		
4.6.6	Oil filters replaced if required during flushing.		
4.6.7	Oil circulation checked for optimum cleaning effect at 12 hour intervals.		
4.6.8	Jumpers removed and 100-mesh screens installed before bearing areas.		
4.6.9	Machinery NOT rotated without proper approval.		
4.6.10	Oil samples free of water and contamination.		
4.7	**Final Assembly**		
4.7.1	All permanent piping properly installed.		
4.7.2	Temporary screens removed and permanent gaskets installed.		
4.7.3	Pump suction strainers removed, cleaned, and reinstalled.		
4.7.4	Piping, valves, orifices, instrumentation installed with proper gaskets as designed. All controls adjusted per instructions.		
4.7.5	New filter elements installed.		
4.8	**Pre-operation Checks for Oil System**		
4.8.1	Lube oil pump pressure relief valves checked for proper operation and setting.		
4.8.2	Lube oil pressure reducing valves checked for proper operation and setting.		
4.8.3	Circulating system shows acceptable flows, pressures, and temperatures.		
4.8.4	Oil pumps and drivers vibration and temperature acceptable.		

Recommended Practice for Machinery Installation and Installation Design

Chapter 9—Machinery Installation: Commissioning

Downstream Segment

API RECOMMENDED PRACTICE 686
SECOND EDITION, DECEMBER 2009

American Petroleum Institute

Contents

Page

1 Scope 9-1

2 Definitions 9-1

3 Commissioning Design 9-2
3.1 Scope 9-2
3.2 Strainers 9-3
3.3 Bypasses 9-3
3.4 Draining and Purging 9-3
3.5 Horsepower 9-3
3.6 Instrumentation 9-3
3.7 Turbine Inlet Piping 9-3
3.8 Instrument Checkout. 9-3
3.9 Special Conditions 9-3

4 Field Commissioning 9-3
4.1 Scope 9-3
4.2 Preoperational Checks 9-4
4.3 Verification of Requirements 9-4
4.4 Bearing Preparation 9-5
4.5 Grease-lubricated Bearings 9-5
4.6 Oil Mist 9-5
4.7 Cooling Water. 9-5
4.8 Vents and Drains 9-5
4.9 Strainers 9-5
4.10 Pipe Cleaning 9-6
4.11 Driver Prerotation Checks. 9-6
4.12 Mist System 9-6
4.13 Coupling Solo Plate. 9-6

4.14 Coupling Safety Area 9-6
4.15 Shaft Viewing 9-7
4.16 Rotation Check. 9-7
4.17 Lockout-tagout. 9-7
4.18 Motor Solo Run 9-7
4.19 Turbine Solo Run 9-7
4.20 Driver to Driven Couple-up. 9-9
4.21 Start-up 9-9

5 Compressors 9-10
5.1 Scope 9-10
5.3 Start-up Centrifugal Compressors 9-10
5.4 Start-up Positive Displacement Compressors. 9-11

Annex A (normative) **Machinery Commissioning Checklist**. 9-13

Annex B (informative) **Steam Blowing Procedure** 9-18

Recommended Practice for Machinery Installation and Installation Design
Chapter 9—Machinery Installation: Commissioning

1 Scope

This recommended practice (RP) is intended to provide guidelines for the design and installation practices that affect the commissioning of machinery. Unless otherwise specified by the user, instructions supplied by the machinery vendor shall be included as part of this RP.

This procedure may serve as a guideline for the commissioning of general- and special-purpose machinery. It should be noted that special-purpose machinery typically requires more detailed and rigorous attention during commissioning.

All design and installation requirements shall be ensured as being complete by completing the installation checklist in Annex A and submitting it to the user or his designated representative.

NOTE It is important to have the vendor-required procedures identified as early as possible so that they may be incorporated before the equipment arrives at the installation site.

2 Definitions

For the purposes of this document, the following standard definitions apply.

2.1
designated machinery representative
The person or organization designated by the ultimate user of the equipment to act on his/her behalf with regard to machinery installation decisions, inspection requirements, and so forth. This representative may be an employee of the user, a third-party inspection company, or an engineering contractor as delegated by the user.

2.2
engineering designer
The person or organization charged with the project responsibility of supplying installation drawings and procedures for installing machinery in a user facility after machinery has been delivered. In general, but not always, the engineering designer specifies machinery in the user facility.

2.3
equipment user
The organization charged with operation of the rotating equipment. In general, but not always, the equipment user owns and maintains the rotating equipment after the project is complete.

2.4
equipment installer
The person or organization charged with providing engineering services and labor required to install machinery in a user facility after machinery has been delivered. In general, but not always, the installer is the project construction contractor.

2.5
equipment train
Two or more rotating equipment machinery elements consisting of at least one driver and one driven element joined together by a coupling.

2.6
final alignment
The aligning of two adjacent machinery shafts after the measurement of piping-imposed strains on the machinery are verified as being within the specified tolerances.

2.7
general-purpose equipment trains
Those trains that have all general-purpose elements in the train. They are usually spared, relatively small in size (power), or are in noncritical service. They are intended for applications where process conditions will not exceed 48 bar gauge (700 lb per in.^{2} gauge) pressure or 205 °C (400 °F) temperature (excluding steam turbines), or both, and where speed will not exceed 5000 revolutions per minute (rpm).

NOTE General-purpose equipment trains have all elements that are either manufacturer's standard or are covered by standards such as the following: ASME B73 pumps, small API 610 pumps, fans, API 611 steam turbines, API 672 air compressors, API 677 general-purpose gears, API 674 reciprocating pumps, API 676 rotary positive displacement pumps, API 680 reciprocating air compressors, and NEMA standard size motors.

2.8
isolation block valve
A valve used to isolate a process machine preparatory to maintenance; also known as a block valve or isolation valve.

2.9
manufacturers or vendor representative
The person or organization designated by the equipment manufacturer or warranty holder to act on his/her behalf pertaining to the equipment handling, installation and use.

2.10
recycle line
A line from the discharge of a pump, blower, or compressor routed back to the suction system. A recycle line will usually include control elements such as meters or valves. The recycle line may connect directly into the suction line or may connect into suction vessels or liquid knockout vessels and may include a cooler; also known as bypass line, minimum flow bypass, or kickback line.

2.11
special-purpose equipment trains
Equipment trains with driven equipment that is usually not spared, is relatively large in size (power), or is in critical service. This category is not limited by operating conditions or speed.

NOTE Special-purpose equipment trains will be defined by the user. In general, any equipment train such as an API 612 turbine, API 618 reciprocating compressor, API 613 gear, API 617 centrifugal compressor, or equipment with a gas turbine in the train should be considered to be special-purpose.

2.12
suction knockout vessel or liquid dropout vessel
A vessel located in the suction line to a compressor or blower used to separate any entrained liquid from the gas stream. It may contain a demister mat and/or centrifugal separators to aid in this separation. Usually the compressor or blower takes suction from the top of the knockout vessel.

2.13
warm-up line
A line used to purge warm or hot fluid through a process machine. The intention is to heat up or maintain the temperature of a machine to a temperature greater than the surrounding ambient temperature.

3 Commissioning Design

3.1 Scope

This section is intended to assist the designer so that commissioning and start-up occur smoothly.

3.2 Strainers

Design shall include either permanent strainers or capability to install temporary strainers.

3.3 Bypasses

Any bypasses required for start-up shall be included in the piping design.

3.4 Draining and Purging

All equipment shall have the capability of controlled draining, purging, and lockout-tagout.

3.5 Horsepower

Drivers shall be of sufficient horsepower for start-up conditions. These conditions include different temperatures, different specific gravities, and different flow rates from normal conditions. Verify these conditions with the user.

3.6 Instrumentation

Instrumentation shall be specified to cover the range of operation through the start-up conditions. This may require larger range instruments from those required for normal operation.

3.7 Turbine Inlet Piping

Steam turbine inlet piping shall have a small start-up bypass around the inlet block valve for turbine solo control.

NOTE The inlet block valve is upstream of the trip valve. Never install a bypass around a trip valve.

3.8 Instrument Checkout

Control loops and instrumentation loops shall be designed such that function can be verified without the process in operation.

3.9 Special Conditions

If special conditions (e.g. alternate gases) are anticipated during initial plant commissioning, the vendor shall provide special instructions (performance maps, etc.) reflecting these conditions

4 Field Commissioning

4.1 Scope

This section provides guidelines for commissioning and start-up of equipment.

4.1.1 General

The commissioning phase defines the first time the equipment is physically integrated into a process involving personnel and concerns outside the boundaries of the machinery footprint. A meeting defining roles, responsibilities and authority of commissioning personnel shall be established. Lines of communication should also be established to facilitate efficient and accurate information exchange and problem resolution. All manufacturer’s requirements should be identified and included to avoid warranty issues.

4.2 Preoperational Checks

4.2.1 Obtain the completed checklists for the foundation, piping, grouting, and alignment activities for the particular equipment train to be started.

4.2.2 It is necessary to have clean piping before start-up. Basic cleaning of the piping system shall be performed to remove such items as weld rod, hard hats, and lunch buckets, out of the lines in a new system prior to flanging up to the new equipment. Additional cleaning of the system shall be provided for steam turbine inlet piping and positive displacement compressor piping.

4.2.2.1 Turbine inlet piping shall be free of dirt and debris, blown clean, and verified as clean using a target method. See Annex B for target procedure.

4.2.2.2 For positive displacement compressor inlet piping, ensure that 100-mesh start-up screens are installed.

4.2.3 Control valves and instrument loops shall be loop functional tested before start-up. Setpoints for controllers, switches, and transmitters shall be obtained from the user, implemented, and verified. Devices authorized to initiate shutdowns of the train shall be loop checked to the final trip device, such as trip and/or trip and throttle valves for turbines and starter or switchgear for motors.

4.2.4 Verify that all gauges have been calibrated either by the manufacturer when supplied new, or by the installer if existing gauges are used.

4.2.5 The latest revision of the piping and instrument diagrams of the system shall be checked to verify that the unit piping, controls, and instrumentation are built per the design. In addition, all temporary measures installed to facilitate pre-commissioning activities are removed. Examples include but are not limited to oil line jumpers and dry gas seal buffer gas interlocks defeated during flushing.

4.2.5.1 Verify seal flush piping installation conforms to the seal vendor drawing.

NOTE Seal flush, vent, quench and drain details are often not found on piping and instrument diagrams. The seal/flush purchasing datasheets and drawings must be referenced for this information.

4.2.6 Verify vibration protective devices are properly set for both amplitudes and time delay (see API 670).

4.2.7 Axial displacement probe calibration sheets must include relative position of pinion, gear or shaft to be acceptable (see API 670 for axial position probe calibration).

4.3 Verification of Requirements

All checklist items should be completed satisfactorily. If any items have not been completed, obtain the proper craft to verify compliance. The turnover punchlist for construction shall be completed and turned over to the designated user's representative. The designated commissioning personnel shall read and understand all vendor requirements for operation and start-up.

4.3.1 Verify that the user- and/or vendor-required vibration analysis equipment is available and properly calibrated.

4.3.2 Verify that the user-required data to be obtained during commissioning has been defined and that the appropriate datasheets have been prepared.

4.4 Bearing Preparation

Drain all liquids as indicated on the commissioning punchlist from the bearing housing and then refill with clean lubricant. Drain as required until clean lubricant comes out the drain. Verify that proper lubricant has been added to the correct level as indicated on the bearing housing.

4.4.1 Constant level oilers that are installed on the housings shall be used to fill the bearing housing. Verify that the spider in the bottom of the oiler is set to maintain the required oil level as indicated on the bearing housing or machinery drawing.

4.4.2 Bearing housings with a sight level indicator shall be filled to the proper level indicated on the sight glass.

4.4.3 All other rolling-element-type bearing housings without constant lube oilers or sight glasses shall be filled to the center of the bottom ball to provide lubrication. This procedure may involve dimensional transferring from internal bearing housing dimensions to the outside so the commissioning representatives have an indicated required level marking on the outside of the bearing housing for reference. The preceding applies to horizontal shaft bearing housings. Refer to equipment manufacturer's Instruction Operating Manual for vertical shaft bearing housings that are lubricated.

4.4.4 Verify that the oil rings or slingers are in the proper location and free to rotate.

4.4.5 For sleeve and pressurized thrust pad bearings, the bearing caps shall be removed unless otherwise specified, and a bearing inspection shall be performed to verify no foreign material will enter the bearing area. Also verify all temporary shipping material has been removed.

4.5 Grease-lubricated Bearings

For grease-lubricated bearings, install grease fittings with required extensions for access without removing covers. Remove vent plugs and grease with a compatible grease until new grease comes out the vent. Replace vent after greasing.

NOTE Certain manufacturers supply permanently lubricated bearings. Lubrication of these bearings may void the warranty. Do not grease permanently lubricated bearings unless specifically instructed by the user.

4.6 Oil Mist

Oil mist lubricated bearings shall have the reclassifiers installed at the pump bearing housings or manifolds as defined by the user. Verify the orifice sizes stamped on the reclassifiers. Verify all connection points and drains are installed in correct locations.

4.7 Cooling Water

All cooling water piping to the machinery shall be flushed and then connected to the machinery prior to operation.

4.8 Vents and Drains

Unless otherwise specified, all vents and drains not permanently piped shall be plugged with a solid pipe plug of similar material as the material to which the plug is installed.

NOTE A possible exception to this is the pump seal flange drain port when using a quench.

4.9 Strainers

Permanent or temporary strainers shall be installed prior to start-up.

4.10 Pipe Cleaning

All foreign material shall be removed from the pipe before connecting to the equipment. Foreign material may consist of weld spatter, corrosion products, scale, and dirt.

4.10.1 Inlet lines to steam turbines shall be blown out with nominal steam pressure, typically 690 kilopascals (100 psig). Verify cleanliness by target method.

4.10.2 Auxiliary oil piping (lube oil and seal oil) shall be cleaned in accordance with the lubrication systems section of this RP (see Chapter 8).

4.10.3 For pumps with dual mechanical seals, verify that the overhead reservoir and/or flush oil supply piping are clean prior to filling with fluid.

4.10.4 Machinery with an external seal oil system shall not be flushed out, steamed out, or operated without the seal oil system in operation at the specified pressure level.

4.10.5 Purging through the machinery shall be held to a minimum period of time to minimize the foreign material in the seal area.

4.10.6 When purging equipment with steam, verify that seals with elastomeric sealing components will not be heated above their allowable temperature limits.

4.11 Driver Pre-rotation Checks

Driver pre-rotation checks shall be made to verify that the installation is correct, safe, and that no damage will occur to the equipment on the initial start.

4.12 Mist System

For oil mist systems, the mist system shall be in operation at least 16 hours before starting equipment lubricated by the system.

4.13 Coupling Solo Plate

Verify the coupling design is capable of a driver solo run. Certain coupling types will require an adapter plate in order to solo the driver. If the coupling requires a solo plate, mount it to the driver coupling.

4.13.1 At this point in time the coupling spool is removed and the coupling does not connect the driver to the driven equipment. Verify that the driver solo operation will not cause any contact with the driven equipment.

4.13.2 A second set of coupling bolts may be required after the solo run in order to connect the driver to the driven equipment.

NOTE Coupling bolts are typically supplied in matched sets from the coupling supplier, and are only good for a limited number of reassemblies. If one bolt assembly from the set needs to be replaced, it is usually good practice to replace all the bolts on that side of the coupling.

4.13.3 If an adapter plate is used for the solo run, torque all coupling bolts to the adapter plate to their required value.

4.14 Coupling Safety Area

Rope off the area around the driver to keep people away from the coupling.

4.15 Shaft Viewing

Verify that the area adjacent to the driver will allow viewing of the coupling during operation in order to ensure the direction of rotation.

4.16 Rotation Check

Refer to the driven equipment drawings to ensure the required direction of rotation. Verify that the motor fan will provide cooling if rotation is opposite that required by driven equipment.

4.17 Lockout-tagout

Verify that all lockout and tagout procedures have been followed so the power system can be energized.

4.18 Motor Solo Run

Motor solo runs are made to determine if any problems exist with the motor operation as soon as possible in order to provide maximum time for correction. Consult with motor manufacturer to verify any special requirements or precautions to be observed during the solo run.

4.18.1 Motor solo requires that the motor and driven equipment not be connected.

4.18.2 Bump the motor start button. This procedure will allow the motor to be energized for a very short period of time in order to verify correct motor rotation. Wait for the motor to come to a stop after the bump. Once the motor is turning with the correct rotation, restart the motor and run for one-half hour minimum or until the bearing temperatures and vibration have stabilized, whichever is longer.

4.18.3 Monitor motor bearing temperatures during solo.

4.18.4 Monitor motor vibration during solo.

NOTE Major motor problems will show up in a short unloaded run. Other motor problems may not manifest until the motor is loaded and up to temperature. If there is a problem with the motor on the solo run, it is typical that there will be a more serious problem during a loaded run.

4.18.5 Monitor motor amps during solo.

NOTE Due to the relatively low current draw during the solo run, temporary intervention may be required to keep the motor starter from tripping offline.

4.18.6 Monitor motor winding temperatures if available during solo.

4.19 Turbine Solo Run

4.19.1 Turbine drive solo should be made as soon as possible after the steam system has been commissioned in order to provide maximum time to correct any turbine problems. Verify that lockout-tagout procedures have been completed.

4.19.2 Verify that piping system is complete and cleaned.

4.19.3 Verify that the vendor instructions are followed properly.

4.19.4 Inlet strainers, either permanent or temporary, shall be installed in the inlet line upstream of the trip and throttle valve.

NOTE The integral strainer to the trip and throttle valve is not sufficient as a start-up strainer.

4.19.5 Unless otherwise specified, the exhaust line shall be opened before the inlet line to avoid overpressuring the turbine exhaust casing.

4.19.6 Verify turbine seal leak-off piping is open and that carbon rings (or other sealing system) are installed, if required.

4.19.7 Verify that the turbine cooling water lines are open.

4.19.8 Ensure that required pressure and temperature gauges are installed.

4.19.9 Verify that a working speed indicator system is available to determine the turbine speed. If a handheld unit is to be used, verify access to signal generator.

4.19.10 Exercise the turbine trip and throttle valves prior to admission of steam. Follow user-specified instructions for trip system function verification before start-up.

4.19.10.1 For extraction turbines, verify that the extraction steam line trip valve functions properly.

4.19.11 Follow user-specified instructions for start-up. Verify that proper governor oil level has been achieved for all governor oil systems.

4.19.12 There may be critical speeds on larger turbines that will need to be avoided during start-up. Determine if there are any speed ranges to avoid for each turbine and agree with operations as to the ramp speed through these areas. The critical speeds to be avoided may also include the driven equipment. Be sure these are considered in the speed ramping logic.

4.19.13 Turbines with carbon seals need a break-in period where the speed is raised and then reduced to properly wear-in the carbons. Vibration should be monitored during this period. When no jumps in vibration are noticed with increasing speed, then the seals are probably properly seated.

4.19.14 If the turbine speed starts to increase after minimum governor speed is reached and the governor does not control, then investigate the governor control system for problems.

NOTE Unloaded turbines will typically require a small amount of steam (relative to a loaded condition) to reach minimum governor speed. Caution must be exercised so as not to overspeed the turbine accidentally. To help control the turbine in a solo run, the steam inlet block valve is normally throttled.

4.19.15 Record vibration data on the datasheet periodically as agreed until the operating conditions have stabilized.

4.19.16 Record minimum and maximum governor speed and trip speed.

4.19.17 Check bearing temperatures and bearing vibrations during the coast-down after trip. The turbine should coast smoothly and not come to an abrupt halt.

4.19.18 Adjust trip setpoint per vendors instructions if trip speed is not acceptable. Turbine trip speed will be given by the turbine manufacturer. Multiple trips within a specified speed range may be required for particular installations.

4.19.19 Ensure not to exceed maximum allowable exhaust temperature during solo runs so as not to damage the turbine.

4.20 Driver to Driven Couple-up

4.20.1 Lockout and tagout equipment as required per plant operating procedures.

4.20.2 Remove any solo plates.

4.20.3 Verify alignment data has been recorded, including any pre-stretch or compression of the coupling spacer.

4.20.4 Install the coupling spacer to the required shaft end spacing (DBSE). Line up match marks if provided. Verify non-spacer coupling DBSE is correct before bolting coupling flanges.

4.20.4.1 For grease-packed or oil-lubricated couplings, follow coupling vendor instructions for lubrication and bolting.

4.20.4.2 Verify all special hardware for use during shipment has been removed.

4.20.5 Torque coupling bolts to the required torque. Typically the torque values are for oil-lubricated bolts. Torque bolts to 50 % of required torque in a pattern across the diagonal. After all bolts are torqued to 50 % then torque all bolts in a similar sequence to 100 % of required torque.

4.20.6 Machinery shall be turned over by hand after coupling to ensure freedom of operation.

4.20.7 On cartridge seal assemblies, verify the locking collars are tight and that the locating cams have been locked out of position so as not to come in contact with the rotating shaft.

4.20.8 Install coupling guard.

4.20.9 Verify all jack screws used for alignment have been loosened so as to eliminate any residual load from the jack screws that might affect alignment.

4.21 Start-up

4.21.1 During initial start-up of the equipment, operating conditions such as inlet and outlet pressures, temperatures, and flow rates shall be recorded.

4.21.2 Verify pumps are filled and vented.

4.21.3 Verify valve positioning is correct.

4.21.4 Vibration signatures shall be obtained for all bearings.

4.21.5 For motor drives, motor current shall be obtained.

4.21.6 All connections shall be inspected for leaks.

4.21.7 Record that proper start-up procedures have been followed.

4.21.8 Piping supports/spring hangers shall be adjusted accordingly when the system is in service at operating temperature (see Chapter 6).

4.21.9 If an extraction turbine is used as a main driver be sure to verify extraction map boundaries are enforced during operation (e.g. max exhaust flow).

5 Compressors

5.1 Scope

5.1.1 5.2 covers activities common to most compressors.

5.1.2 5.3 covers activities common to centrifugal compressors.

5.1.3 5.4 covers activities common to positive displacement compressors.

5.2 Commissioning of Compressors

This section contains guidelines for the commissioning of compressors.

5.2.1 A vendor service representative may be required on-site to support the commissioning and to protect the warranty.

5.2.2 Obtain the completed checklists to verify installation and cleanout is completed.

5.2.3 Verify all instrumentation has been calibrated and functionally tested.

5.2.4 Verify all control loops have been functionally tested and all control valves work properly. Verify surge control valve stroke time and general operation.

5.2.5 Verify that all alarm and trip systems have been functionally tested.

5.2.6 Verify that plant operating instructions have been clearly understood and that all valves, controllers, and switches are in their proper positions.

5.2.7 Verify that the lube oil system is in service and that the backup pump is in the auto position.

5.2.8 Verify that the compressor seal system is in service and that all flows and pressures are normal.

5.2.9 Verify all start interlocks and permissives are functional.

5.3 Start-up Centrifugal Compressors

For centrifugal compressors, follow users specified procedures for start-up. These procedures shall include but not be limited to the steps listed below

a) Inlet control valve/inlet guide vane setting for start-up. Typical motor drives require inlet valve position to be as closed as possible to minimize acceleration time. After acceleration there may also be an intermediate set point until process controllers take command.

b) Seal system operation including any remote seal pots and degassing systems.

c) Surge control system operation. Typical surge systems are placed in automatic for start-up.

d) Once the compressor is started, the inlet control valve/guide vanes and the surge control valve shall be adjusted to achieve smooth operation of the compressor and tuned to allow the widest operating range while maintaining machinery protection. If a recycle line is used, care must be exercised not to exceed the compressor temperature limits.

NOTE Closing the throttle valve too far or raising the output pressure beyond design limits (by discharge throttling or process obstruction) can result in surging of the compressor. Violent surging is detected by an audible thumping from the compressor, vibrations, large fluctuations in discharge pressure, or motor current and axial position of the rotor, and checkvalve banging. Violent surging may cause the thrust bearing to fail, as well as other potential damage. Mild surge can be difficult to detect and may exhibit some or all of the above symptoms on an attenuated scale. Mild surge can over time also lead to catastrophic compressor failure and should also be avoided. On constant speed compressors, surge can be stopped by increasing the flow through the compressor, and/or reducing the pressure ratio across the compressor. Follow user's and manufacturer's guidelines.

e) Record compressor operating data on datasheet. Operating data should be recorded on short intervals until a design load is reached. Once at design load it may take up to 12 hours until all thermal influences are stabilized. Data should be recorded through this period and maintained as unit baseline performance for future reference.

f) Verify compressor operation is satisfactory and that all auxiliary systems are working properly.

5.4 Start-up Positive Displacement Compressors

For reciprocating compressors and rotary screw compressors, follow the users specified procedures for start-up. These procedures shall include, but not be limited to the following.

5.4.1 For reciprocating compressors an atmospheric run is typically made in order to verify mechanical integrity. This run is a non-pressurized operation of the compressor. To make a non-pressurized run, do the following below.

5.4.2 Remove suction or discharge valves from each compression end of the cylinder.

5.4.3 Install valve covers on the valve ports without the valves with double nuts between the cylinder and valve cover. This will allow air flow in and out of the cylinder during operation, while minimizing the opportunity of introducing objects into the cylinder during operation. Secure the valve covers by putting nuts on the top of the valve cover at the two long studs provided.

5.4.4 Start cylinder lubricator system (if applicable). For lubricated cylinders, the lubricators are typically started several minutes before the compressor is first operated in order to ensure oil is in the cylinder.

5.4.5 Rotate the compressor using the pneumatic or manual barring device. This will distribute the cylinder oil and verify that there are no mechanical tight spots during the revolution. If the machine will not manually bar over, then check for mechanical interference in the running gear or in the cylinders. Do not operate the compressor until it is free to rotate.

5.4.6 Operate the compressor for a short period of time, and then shut down and inspect for problems. Typical break-in period for atmospheric operation is as follows.

5.4.6.1 After operating for 5 minutes to 10 minutes, shut down and check crosshead connecting rod and main bearing for high temperatures or metal wear. Temperatures can easily be checked with a thermal gun or contact pyrometer.

5.4.6.2 If first run is acceptable, operate for 30 minutes to 45 minutes and recheck.

5.4.6.3 If the first two runs show no problems, then run for four hours or until bearing temperatures stabilize. Inspect and, if acceptable, install valves and make ready for operation.

5.4.6.4 Pressurize the compressor with inert gas such as nitrogen and check for leaks.

NOTE There may be a need and a capability to test with other gasses, such as helium.

5.4.6.5 Follow plant instructions for venting and introducing process gas to the compressor.

5.4.6.6 Operate all capacity controls before start-up and verify action.

5.4.6.7 Start compressor at 0 % capacity step.

5.4.6.8 Load compressor to users required capacity.

5.4.6.9 Record compressor operating data on datasheet.

5.4.6.10 Verify compressor operation is satisfactory and that all auxiliary systems are working properly

5.4.7 For rotary screw compressors an atmospheric run is typically not performed on-site. The compressor has been factory performance tested in order to verify mechanical integrity and performance acceptability.

NOTE Oil flooded rotary screw compressors require discharge pressure for lubrication and cooling. Consult with compressor manufacturer if compressor system is to be operated on air or other non-process gas prior to start-up, for proper setting of alarm and shutdown values when air or non-process gas is used for test run.

5.4.7.1 Pressurize the compressor with an inert gas such as nitrogen and check for leaks. Oil flooded compressors and associated oil piping should be leak checked before the system is filled with its initial oil charge.

NOTE There may be a need and capacity to test with alternate gas (i.e. helium).

5.4.7.2 A start-compressor pre-lubricator system (if applicable), or main oil pump, as required. For rotary compressors, the lubrication system is typically started several minutes before the compressor is first operated in order to ensure oil is at the appropriate compressor oil delivery points, such as bearings, mechanical seal, rotor injection (oil flooded only) and control system.

5.4.7.3 Rotate the compressor using the pneumatic or manual barring device. This will distribute the compressor lubricating oil and verify that there are no mechanical tight spots during the revolution. If the machine will not manually bar over, then check for mechanical interference in the running gear or rotors. Do not operate the compressor until it is free to rotate.

5.4.7.4 Operate the compressor as directed by the compressor manufacturer, observing compressor operating conditions as compared with predicted performance.

5.4.7.5 When compressor and associated systems have reached normal operating temperatures, verify compressor performance is acceptable.

5.4.7.6 After test run is completed and prior to operation with specified process gas, confirm that compressor alarms and shutdown values are properly reset for specified operating conditions.

5.4.7.7 Install equipment as required and make ready for operation.

Annex A
(normative)

Machinery Commissioning Checklist

Section	Requirements	Name	Date
4.2	**Pre-operational Checks**		
4.2.1	Receiving, storage, foundation, grouting, piping and alignment datasheets completed and attached.		
4.2.2	Piping clean/free blown.		
4.2.2.1	Steam line free blow required (yes/no)?		
4.2.2.2	Positive displacement compressor 100 mesh screen installed (may be multiple locations). Indication of pressure drop across the screens has been identified.		
4.2.3	Piping clean, control loops functionally tested and correct, all setpoints set and verified.		
4.2.4	New or calibrated gages supplied.		
4.2.5	System piping and instrumentation drawings verified.		
4.2.5.1	Verify pump seal flush drawings conform to the seal vendor drawings.		
4.2.6	Verify all vibration transducer calibration is correct.		
4.2.7	Verify all applicable vibration calibration information has been supplied in accordance with API 670.		
4.3	**Verification of Requirements**		
	All vendor and plant requirements read and understood, checklists completed, etc.		
4.3.1	All required vibration analysis equipment has been calibrated and ready for use.		
4.3.2	Appropriate commissioning data sheets prepared and ready for commissioning activities.		
4.4	**Bearing Preparation**		
	Bearing housings filled with proper lubricant and ready for operation.		
4.4.1	Constant level oilers set to proper level.		
4.4.2	Site glasses at proper level.		
4.4.3	All oil levels set to proper level.		
4.4.5	Thrust pad and/or journal inspection indicates clean, and all temporary shipping material has been removed.		
4.5	**Grease Lubricated Bearings**		
	Grease bearings greased with proper grease.		
4.6	**Oil Mist**		
	Oil mist reclassifiers properly installed. Orifice sizes identified and correct. All connection points and drains installed in correct locations.		
4.7	**Cooling Water**		
	Cooling water piping flushed and connected.		
4.8	**Vents and Drains**		
	All vent and drain plugs installed with similar material of construction.		

Section	Requirements	Name	Date
	NOTE Identify any pump seal flange drain ports with quenches that should not be plugged		
4.9	**Strainers**		
	Permanent and/or temporary strainers installed properly. Finest mesh size:		
4.10	**Pipe Cleaning**		
4.10.1	Piping to equipment blown clean with nominal steam pressure.		
4.10.2	Auxiliary piping connected to blow out stream and vented to safe area.		
4.10.3	Verify that pumps with dual mechanical seals have the overhead reservoir and supply piping clean prior to charging with sealing fluid.		
4.10.4	External seal oil systems shall NOT be flushed, steamed out or operated without the seal oil system in operation at the specified pressure level.		
4.10.5	Purging through machinery is to be minimized to prevent contamination.		
4.10.6	Verify that steam purging does exceed the temperature limits of elastomeric sealing components.		
4.11	**Driver Pre-rotation Checks**		
	Driver prerotation checks made to verify safety and integrity of installation.		
4.12	**Mist System**		
	Mist lubrication system in operation a minimum of 16 hours prior to equipment operation		
4.13	**Coupling Solo Plates**		
	Verify that the coupling is capable of a solo run; certain types require adapters.		
4.13.1	Spool is removed and not capable of making any contact with driven equipment.		
4.13.2	Use second set of coupling bolts after solo run if required.		
4.13.3	If used, torque all adaptor plate bolts to specified value.		
4.14	**Coupling Safety Area**		
	Ensure that the coupling area is properly barricaded for the solo run.		
4.15	**Shaft Viewing**		
	Verify that the area around coupling will allow safe viewing for rotational direction.		
4.16	**Rotation Check**		
	Verify that all equipment is of the correct rotation.		
4.17	**Lockout-tagout**		
	Verify that all lockout-tagout procedures have been followed prior to energizing the system.		
4.18	**Motor Solo Run**		
	Consult with the motor manufacturer for any special requirements or procedures.		
4.18.1	Ensure that motor is disconnected from driven equipment.		
4.18.2	“Bump” the motor start button to check for correct rotation. Correct if necessary.		
4.18.3	Monitor motor bearing temperature during solo run.		
4.18.4	Monitor motor vibration during solo run.		
4.18.5	Monitor motor amp (all three phases) during motor solo.		

Section	Requirements	Name	Date
4.18.6	Monitor motor winding temperatures (winding RTDs) during solo run.		
4.19	**Turbine Solo Run**		
4.19.1	Turbine solo is performed as soon as possible after commissioning of the stream system.		
4.19.2	Piping system is verified as complete and clean.		
4.19.3	Vendor instructions for solo are properly followed.		
4.19.4	Inlet strainers (either temporary or permanent) are installed upstream of the trip and throttle valve.		
4.19.5	Precautions are taken so as to not overpressure the turbine exhaust.		
4.19.6	Seal leak-off piping, carbon rings, and other appurtances are ready for operation.		
4.19.7	Turbine cooling lines are verified open.		
4.19.9	Functional speed indicator is available at the turbine.		
4.19.10	Trip and throttle valve is fully stroked and tripped prior to admission of steam.		
4.19.11	Verify that proper governor oil level is achieved.		
4.19.12	Verify that “critical speed ramps” have been programmed into governor.		
4.19.13	Ensure that carbon ring seals are properly “broken in” during solo run.		
4.19.14	Correct governor speed control issues while the governor is on “mini-control.”		
4.19.15	Record turbine vibration readings periodically throughout solo run.		
4.19.16	Record governor minimum and maximum speed and trip speed.		
4.19.17	Record turbine bearing temperatures periodically throughout solo run.		
4.19.18	Adjust trip setpoints as required.		
4.19.19	Ensure that the maximum allowable temperature of the turbine exhaust is not exceeded.		
4.20	**Driver-to-driven Couple-up**		
4.20.1	Equipment locked and tagged out per plant procedures.		
4.20.2	Remove any solo plates previously installed.		
4.20.3	Verify coupling alignment and pre-stretch data.		
4.20.4	Record DBSE ( ) prior to installing coupling spacer.		
4.20.4.1	Vendor instructions followed for lubricated couplings.		
4.20.4.2	Verifying that all coupling shipping hardware has been removed.		
4.20.5	Coupling bolts lubricated and torqued as specified.		
4.20.6	Coupled equipment rotates freely with no tight spot.		
4.20.7	Cartridge seal assemblies checked for proper installation.		
4.20.8	Coupling guard(s) installed.		
4.20.9	All alignment jackscrews backed away from equipment feet.		
4.21	**Start-up**		
4.21.1	All process data recorded for initial.		
4.21.2	Verify all pumps are properly filled and vented.		
4.21.3	Verify that all valve positioning is correct for start-up.		
4.21.4	Vibration signatures are to be obtained for all bearings at start-up.		
4.21.5	Obtain drive motor current at start-up.		
4.21.6	Inspect all connections for leaks.		

Section	Requirements	Name	Date
4.21.7	Proper start-up procedures obtained and followed.		
4.21.8	Piping supports adjusted at operating temperature.		
4.21.9	Ensure that turbine operating boundaries are adhered to.		
5	**Compressors**		
5.2	**Commissioning of Compressors**		
5.2.1	Vendor representative on site for assistance.		
5.2.2	Completed checklists for installation and commissioning are reviewed.		
5.2.3	All instrumentation calibrated and functionally checked.		
5.2.4	View all controls, valves, and surge control systems have been calibrated and functionally checked.		
5.2.5	Verify that all alarm and trip systems have been calibrated and functionally checked.		
5.2.6	Plant operating personnel trained and understand operating procedures.		
5.2.7	Lube oil system in service and auxiliary pump in “auto” start position.		
5.2.8	Seal system(s) in service and functioning properly.		
5.2.9	Verify that all interlocks and permissives are functional.		
5.3	**Start-up Centrifugal Compressors**		
5.3 a)	Inlet control valve at start-up setting.		
5.3 b)	Seal system in operation and functioning properly.		
5.3 c)	Surge control set in automatic for start-up.		
5.3 d)	Capacity controls adjusted for smooth operation and span of control after start-up.		
5.3 e)	Record all data until design operating parameters have been achieved.		
5.4	**Start-up Positive Displacement Compressors**		
5.4.1	Compressor prepared for atmospheric run-in.		
5.4.2	Suction and discharge valves removed from reciprocating compressor cylinders.		
5.4.3	Valve covers reinstalled with spaces per specification.		
5.4.4	Cylinder lubricator started (if applicable).		
5.4.5	Compressor barred over and free to rotate.		
5.4.6	Compressor operated for short (i.e. 30 seconds) duration and inspected for problems.		
5.4.6.1	Compressor run for 5 to 10 minutes and inspected for signs of high temperature or wear.		
5.4.6.2	Compressor run for 30 to 45 minutes and inspected for signs of high temperature or wear.		
5.4.6.3	Compressor run for 4 hours and inspected for signs of high temperature or wear.		
5.4.6.4	Compressor pressurized with inert gas and leak check. Readied for operation.		
5.4.6.5	Vent compressor down and introduce process gas.		
5.4.6.6	Check capacity control system for proper operation		
5.4.6.10	Compressor started and operated at design capacity without issues.		
5.4.7	Rotary screw compressor NOT run-in on air.		
5.4.7.1	Compressor pressurized with inert has and leak checked. Readied for operation.		

Section	Requirements	Name	Date
5.4.7.2	Lube oil pump started in preparation for operation.		
5.4.7.3	Compressor barred over and free to rotate.		
5.4.7.4	Compressor started with no unusual noise, vibration, or temperature.		
5.4.7.5	Verify compressor performance at design conditions. Record all data.		
5.4.7.6	Confirm that alarms and shutdowns are reset for specified operating conditions.		
5.4.7.7	Equipment confirmed ready for normal process operation.		

Annex B
(informative)

Steam Blowing Procedure

B.1 Scope

The purpose of steam blowing is to remove the foreign material from the steam piping. Particles carried by the steam into the turbine will damage the governor valve, nozzle block, and turbine wheel blading.

B.1.1 Remove the piping spool between the turbine trip valve, and the isolation block for the turbine inlet. If there is a steam strainer downstream of the block valve, the strainer must be removed.

B.1.2 Support inlet piping to withstand the reactive force from the steam blow.

B.1.3 Place a covering over the turbine inlet flange. The cover protects the turbine from particles entering during the steam blow, and acts as a device to hold the target. Typically a blind flange can be used with brackets on the outside to hold the target plate. Certain applications will require a re-directional spool be installed in order to direct the steam in a safe direction.

B.1.4 Target mounting methods must ensure that the targets will remain safely attached during the steam blowing process. Actual target material shall be polished 304 or 316 stainless steel. At least two targets shall be supplied for the test.

B.1.5 Close the inlet valve at the header and open the inlet valve at the turbine.

B.1.6 Blow steam through the system without any backpressure at flows as close to maximum as possible until no particles can be observed from the line. Several cycles of blowing may be required to remove the particles. Sometimes a cooling process followed by a rapid heating can assist the process.

NOTE Steam blowing allows hot steam to be discharged around the turbine area. Particles will be discharged from the open valve at high velocities requiring the area to be clear. Steam blowing generally causes an increase in the local noise levels and proper instruction for noise hearing protection should be provided.

B.1.7 Close the header valve once no particles are seen, and securely attach the polished target on the target support.

B.1.8 Open the steam header valve and blow for at least 15 minutes. Close the header valve and inspect the target.

B.1.9 Acceptance criteria for piping cleanliness is based on the following:

a) an acceptance target will have no raised pits;

b) an acceptable target will have less than three pits in any square centimeter of the target, and no pit shall be larger than 1 MM;

c) steam blowing shall be repeated until the acceptance criteria has been met.

American
Petroleum
Institute

200 Massachusetts Avenue, NW
Suite 1100
Washington, DC 20001-5571
USA

Information about API publications, programs, and services is available at **www.api.org**.

Product No. C68602